https://daikintechnicaldatahub.eu

Installation manual

Daikin Altherma 4 H F

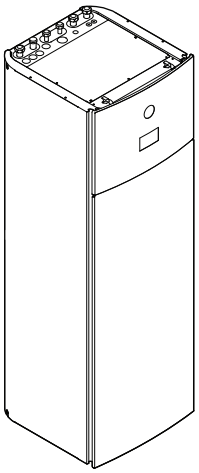

EPVX07SU18A▲4V▼
EPVX07SU23A▲4V▼

▲= 1, 2, 3, …, 9, A, B, C, …, Z
▼= , , 1, 2, 3, …, 9

Installation manual
Daikin Altherma 4 H F

English

Table of contents

1 About this document 2
2 Specific installer safety instructions 3
3 About the box 4
3.1 Indoor unit 4
3.1.1 To remove the accessories from the indoor unit 4
3.1.2 To handle the indoor unit 5
3.2 Domestic hot water tank kit 5
3.2.1 To remove the accessories from the domestic hot water tank kit 5
3.3 Checklist for the required DHW accessories 5
4 Unit installation 5
4.1 Preparing the installation site 5
4.1.1 Installation site requirements of the indoor unit 5
4.2 Opening and closing the unit 6
4.2.1 To open the indoor unit 6
4.2.2 To close the indoor unit 7
4.3 Installing the indoor unit 7
4.3.1 To install the indoor unit 7
4.3.2 To connect the drain hose to the drain 7
5 Piping installation 8
5.1 Preparing water piping 8
5.1.1 To check the water volume and flow rate 8
5.2 Connecting water piping 9
5.2.1 To connect the water piping 9
5.2.2 To connect the water piping for domestic hot water 10
5.2.3 To connect the recirculation piping 11
5.2.4 To fill the water circuit 11
5.2.5 To protect the water circuit against freezing 11
5.2.6 To fill the domestic hot water tank 12
5.2.7 To insulate the water piping 12
6 Electrical installation 12
6.1 About electrical compliance 12
6.2 Guidelines when connecting the electrical wiring 12
6.3 Field IO connections 12
6.4 Connections to the indoor unit 14
6.4.1 To connect the electrical wiring to the indoor unit 15
6.4.2 To connect the main power supply 16
6.4.3 To connect the backup heater power supply 17
6.4.4 To connect the normally closed shut-off valve (inlet leak stop) 19
6.4.5 To connect the shut-off valve 19
6.4.6 To connect the pumps (DHW pump and/or external pumps) 20
6.4.7 To connect the domestic hot water ON signal 20
6.4.8 To connect the alarm output 20
6.4.9 To connect the space cooling/heating ON/OFF output 20
6.4.10 To connect the changeover to external heat source 20
6.4.11 To connect the bivalent bypass valve 21
6.4.12 To connect the electricity meters 21
6.4.13 To connect the safety thermostat 21
6.4.14 Smart Grid 22
6.4.15 To connect the WLAN cartridge (delivered as accessory) 23
6.4.16 To connect the Ethernet (Modbus) cable 23
7 Configuration 24
7.1 Configuration wizard 24
[10.1] Location and language 25
[10.2] Timezone 25
[10.3] Time/date 25
[10.4] System 1/4 25
[10.5] System 2/4 26
[10.6] System 3/4 26
[10.7] System 4/4 26
[10.8] Backup heater 26
[10.9] Main zone 1/4 26
[10.10] Main zone 2/4 27
[10.11] Main zone 3/4 (Heating WD curve) 27
[10.12] Main zone 4/4 (Cooling WD curve) 27
[10.13] Additional zone 1/4 27
[10.14] Additional zone 2/4 28
[10.15] Additional zone 3/4 (Heating WD curve). 28
[10.16] Additional zone 4/4 (Cooling WD curve). 28
[10.17] Configuration wizard – DHW 1/2 28
[10.18] Configuration wizard – DHW 2/2 29
[10.19] Configuration wizard 29
7.2 Weather-dependent curve 29
7.2.1 What is a weather-dependent curve? 29
7.2.2 Using weather-dependent curves 29
7.3 Menu structure: Overview installer settings 30
8 Commissioning 30
8.1 Checklist before commissioning 31
8.2 Checklist during commissioning 32
8.2.1 To unlock the outdoor unit (compressor) 32
8.2.2 To open the stop valve of the outdoor unit's refrigerant vessel 34
8.2.3 To update the user interface software 34
8.2.4 To check the minimum flow rate 34
8.2.5 To perform an air purge 35
8.2.6 To perform an operation test run 35
8.2.7 To perform an actuator test run 36
8.2.8 To perform an underfloor heating screed dryout 37
9 Hand-over to the user 38
10 Maintenance and service 38
10.1 Overview: Maintenance and service 39
10.2 Maintenance safety precautions 39
10.3 Checklist for yearly maintenance of the indoor unit 39
10.4 To drain the domestic hot water tank 40
10.5 To inspect the inside of the domestic hot water tank 40
10.6 About cleaning the water filter in case of trouble 41
10.6.1 To remove the water filter 41
10.6.2 To clean the water filter in case of trouble 41
10.6.3 To install the water filter 42
11 Technical data 43
11.1 Piping diagram: Indoor unit 43
11.2 Wiring diagram: Indoor unit 44
11.3 Technical specifications: Domestic hot water tank 48
11.3.1 Test results in accordance with EN12897 (2016) 48
11.3.2 Warning label 48

1 About this document

Target audience

Authorised installers

Documentation set

This document is part of a documentation set. The complete set consists of:

- **General safety precautions:**
  - Safety instructions that you must read before installing
  - Format: Paper (in the box of the indoor unit)
- **Operation manual:**
  - Quick guide for basic usage
  - Format: Paper (in the box of the indoor unit)

- **User reference guide:**
  - Detailed step-by-step instructions and background information for basic and advanced usage
  - Format: Digital files on https://www.daikin.eu. Use the search function 🔍 to find your model.
- **Installation manual – Outdoor unit:**
  - Installation instructions
  - Format: Paper (in the box of the outdoor unit)
- **Installation manual – Indoor unit:**
  - Installation instructions
  - Format: Paper (in the box of the indoor unit)
- **Installer reference guide:**
  - Preparation of the installation, good practices, reference data, …
  - Format: Digital files on https://www.daikin.eu. Use the search function 🔍 to find your model.
- **Configuration reference guide:**
  - Configuration of the system.
  - Format: Digital files on https://www.daikin.eu. Use the search function 🔍 to find your model.
- **Addendum book for optional equipment:**
  - Additional info about how to install optional equipment
  - Format: Paper (in the box of the indoor unit) + Digital files on https://www.daikin.eu. Use the search function 🔍 to find your model.

The latest revision of the supplied documentation is published on the regional Daikin website and is available via your dealer.

The original instructions are written in English. All other languages are translations of the original instructions.

Technical engineering data

- A **subset** of the latest technical data is available on the regional Daikin website (publicly accessible).
- The **full set** of the latest technical data is available on the Daikin Business Portal (authentication required).

Online tools

In addition to the documentation set, some online tools are available for installers:

- **Daikin Technical Data Hub**
  - Central hub for technical specifications of the unit, useful tools, digital resources, and more.
  - Publicly accessible via https://daikintechnicaldatahub.eu.
- **Heating Solutions Navigator**
  - Digital toolbox that offers a variety of tools to facilitate the installation and configuration of heating systems.
  - To access the Heating Solutions Navigator, registration to the Stand By Me platform is required. For more information, see https://professional.standbyme.daikin.eu.
- **Daikin e-Care**
  - Mobile app for installers and service technicians that allows you to register, configure and troubleshoot heating systems.
  - Use the QR codes below to download the mobile app for iOS and Android devices. Registration to the Stand By Me platform is required to access the app.

App Store | Google Play

2 Specific installer safety instructions

Always observe the following safety instructions and regulations.

Installation site (see "4.1 Preparing the installation site" [▶ 5])

WARNING

Follow the service space dimensions in this manual to install the unit correctly. See "4.1.1 Installation site requirements of the indoor unit" [▶ 5].

Opening and closing the unit (see "4.2 Opening and closing the unit" [▶ 6])

DANGER: RISK OF ELECTROCUTION

DANGER: RISK OF BURNING/SCALDING

Installing the indoor unit (see "4.3 Installing the indoor unit" [▶ 7])

WARNING

The indoor unit installation MUST be in accordance with the instructions from this manual. See "4.3 Installing the indoor unit" [▶ 7].

Piping installation (see "5 Piping installation" [▶ 8])

WARNING

Field piping MUST be in accordance with the instructions from this manual. See "5 Piping installation" [▶ 8].

WARNING

Adding anti-freeze solutions (e.g. glycol) to the water is NOT allowed.

WARNING

The discharge pipes from the pressure relief valves MUST terminate in a safe and visible position without forming any risk to persons in the vicinity.

WARNING

- Discharge piping, tundish, drain valves, etc. MUST be positioned away from any electrical components.
- The discharge pipe away from the tundish MUST terminate in a safe, visible position without forming any risk to persons in the vicinity.

WARNING

- Do NOT install any valves between the domestic hot water tank and relief valves/expansion vessel.
- Do NOT install shut-off valves between the expansion relief valve and the domestic hot water tank.

Electrical installation (see "6 Electrical installation" [▶ 12])

DANGER: RISK OF ELECTROCUTION

WARNING

Electrical wiring MUST be in accordance with the instructions from:

- This manual. See "6 Electrical installation" [▶ 12].
- The wiring diagram, which is delivered with the unit, located on the inside of the indoor unit switch box cover. For a translation of its legend, see "11.2 Wiring diagram: Indoor unit" [▶ 44].

WARNING

- All wiring MUST be performed by an authorised electrician and MUST comply with the applicable national wiring regulation.
- Make electrical connections to the fixed wiring.
- All components procured on-site and all electrical construction MUST comply with the applicable legislation.

WARNING

ALWAYS use multicore cable for power supply cables.

WARNING

If the supply cord is damaged, it MUST be replaced by the manufacturer, its service agent or similarly qualified persons in order to avoid a hazard.

CAUTION

Do NOT push or place redundant cable length into the unit.

WARNING

The backup heater MUST have a dedicated power supply and MUST be protected by the safety devices required by the applicable legislation.

CAUTION

To guarantee the unit is completely earthed, ALWAYS connect the backup heater power supply and the earth cable.

INFORMATION

For details on the fuse ratings, the fuse types and the circuit breaker ratings, see "6 Electrical installation" [▸ 12].

Commissioning (see "8 Commissioning" [▸ 30])

WARNING

Commissioning MUST be in accordance with the instructions from this manual. See "8 Commissioning" [▸ 30].

WARNING

After commissioning, do NOT turn OFF the circuit breakers (**c**) to the units so that the protection remains activated. In case of normal kWh rate power supply (**a**), there is one circuit breaker. In case of preferential kWh rate power supply (**b**), there are two.

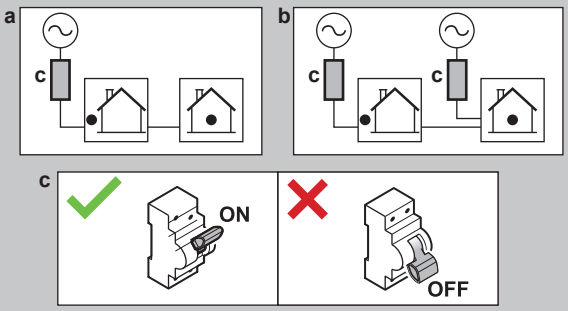

Maintenance and service (see "10 Maintenance and service" [▸ 38])

CAUTION

Water coming out of the valve may be very hot.

WARNING

If the internal wiring is damaged, it has to be replaced by the manufacturer, its service agent or similarly qualified persons.

DANGER: RISK OF BURNING/SCALDING

The water in the tank can be very hot.

3 About the box

Keep the following in mind:

- At delivery, the unit MUST be checked for damage and completeness. Any damage or missing parts MUST be reported immediately to the claims agent of the carrier.
- Bring the packed unit as close as possible to its final installation position to prevent damage during transport.
- Prepare in advance the path along which you want to bring the unit to its final installation position.

3.1 Indoor unit

3.1.1 To remove the accessories from the indoor unit

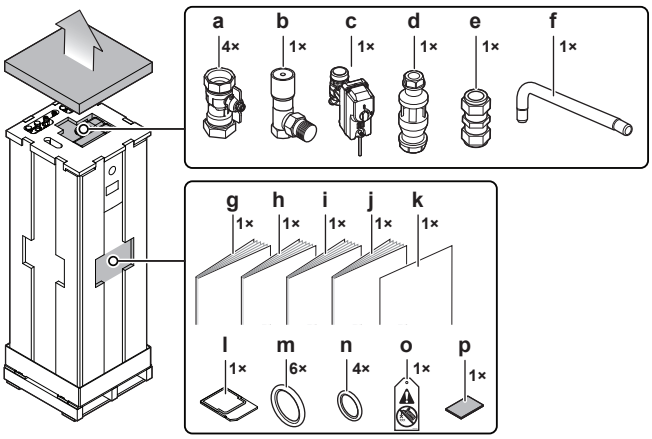

- **a** Shut-off valves for water circuit
- **b** Differential pressure bypass valve
- **c** Normally closed shut-off valve (inlet leak stop)
- **d** Tundish (to mount onto the pressure relief valve discharge pipe)
- **e** Brass compression coupler
- **f** Discharge pipe (for pressure relief valve)
- **g** General safety precautions
- **h** Addendum book for optional equipment
- **i** Indoor unit installation manual
- **j** Operation manual
- **k** Addendum – Updating the BRC1HH* firmware
- **l** WLAN cartridge
- **m** Sealing rings for shut-off valves (space heating water circuit)
- **n** Sealing rings for field-supplied shut-off valves (domestic hot water circuit)
- **o** "No glycol" tag (to attach to the field piping near the filling point)
- **p** Sealing tape for low voltage wiring intake

3.1.2 To handle the indoor unit

Use the handles at the back and at the bottom to carry the unit.

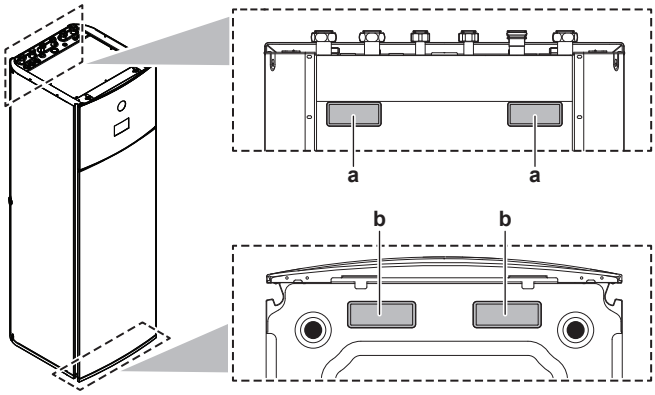

- **a** Handles at the back of the unit
- **b** Handles at the bottom of the unit. Carefully tilt the unit backwards so that the handles become visible.

3.2 Domestic hot water tank kit

3.2.1 To remove the accessories from the domestic hot water tank kit

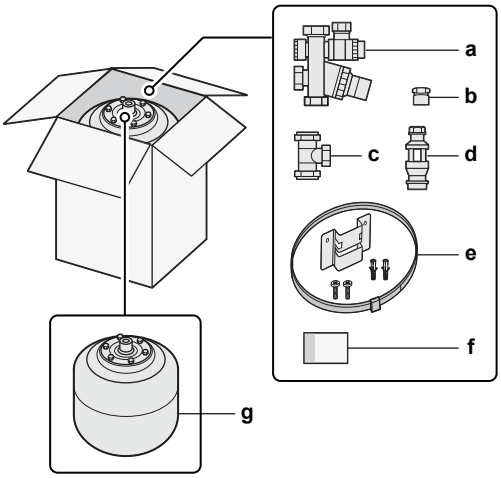

- **a** Pressure reducing valve/pressure relief valve combination. Water inlet and water outlet 22 mm connection, discharge piping connection 15 mm
- **b** Adaptor 22 mm×3/4" Female BSP
- **c** T-piece 22 mm×22 mm×22 mm
- **d** Tundish 15 mm inlet, 22 mm outlet
- **e** Wall mounting set for expansion vessel
- **f** Instruction sheet
- **g** Expansion vessel of 18 l – 3/4" Male BSP

NOTICE

All piping MUST be installed according to section G3 of the Building Regulations.

3.3 Checklist for the required DHW accessories

For installation compliant with section G3 of the Building Regulations, you must verify that the following accessories are present.

Delivered with indoor unit:

☐	Tundish 15 mm inlet, 22 mm outlet

Delivered with domestic hot water tank kit:

☐	Pressure reducing valve/pressure relief valve combination
☐	Adaptor 22 mm×3/4" Female BSP
☐	T-piece 22 mm×22 mm×22 mm
☐	Tundish 15 mm inlet, 22 mm outlet
☐	Wall mounting set for expansion vessel
☐	Instruction sheet
☐	Expansion vessel of 18 l – 3/4" Male BSP

4 Unit installation

4.1 Preparing the installation site

4.1.1 Installation site requirements of the indoor unit

- The indoor unit is designed for indoor installation only and for the following ambient temperatures:
  - Space heating operation: 5~30°C
  - Space cooling operation: 5~35°C
  - Domestic hot water production: 5~35°C
- Mind the measurement guidelines:

Maximum height difference between indoor unit and outdoor unit	10 m
Maximum water piping length (single run) between outdoor unit and indoor unit in case of…	
EPSKS04+06	
1" field piping	20 m[(a)]
EPSKS07	
1" field piping	7 m[(a)]
1 1/4" field piping	20 m[(a)]

[(a)] The precise water piping length can be determined using the Hydronic Piping Calculation tool. The Hydronic Piping Calculation tool is part of the Heating Solutions Navigator which can be reached via https://professional.standbyme.daikin.eu. Contact your dealer if you have no access to the Heating Solutions Navigator.

- Mind the following spacing installation guidelines:

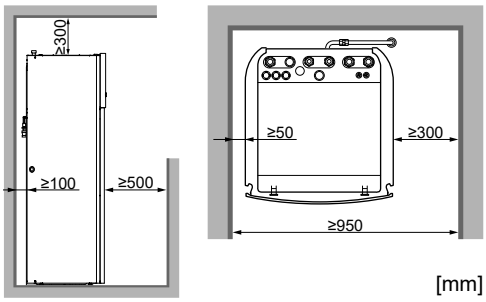

INFORMATION

If you have limited installation space, do the following before installing the unit in its final position: "4.3.2 To connect the drain hose to the drain" [▸ 7]. It requires to remove one or both side panels.

4.2 Opening and closing the unit

4.2.1 To open the indoor unit

Overview

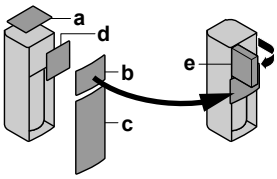

a	Top panel
b	User interface panel
c	Front panel
d	Switch box cover
e	Switch box

Open

1 Remove the top panel.

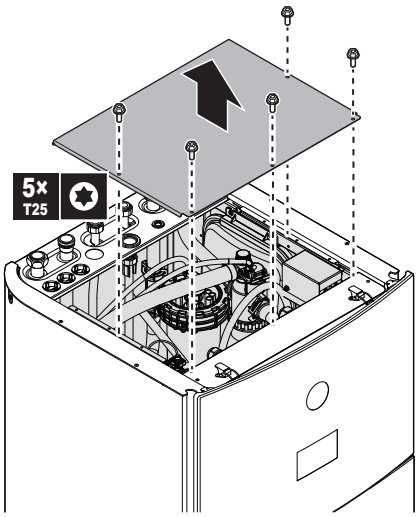

2 Remove the user interface panel. Open the hinges at the top and slide the top panel upwards. Temporary place the user interface panel on top of the unit.

NOTICE

- The wire harnesses and connectors that are connected to the user interface panel are fragile. Handle with care.
- When the user interface panel is removed, make sure it does not drop.

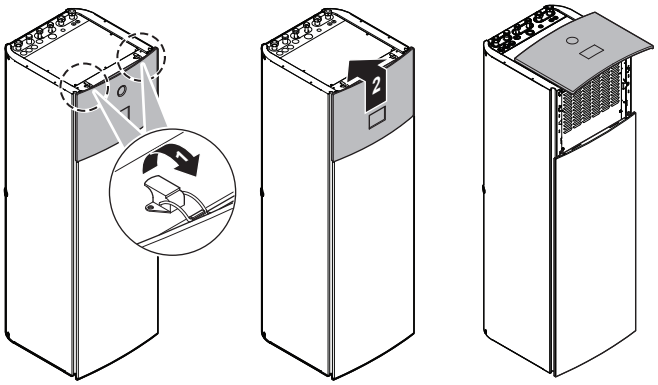

3 Remove the front plate.

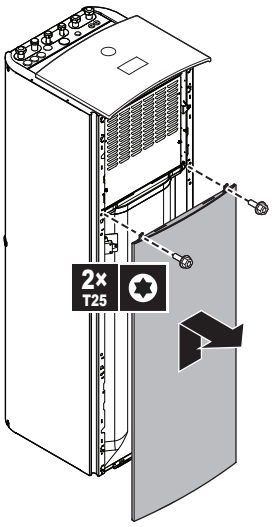

4 Attach the user interface panel to the front of the unit. (Not possible when you have to remove one of the side panels. See "4.3.2 To connect the drain hose to the drain" [▶ 7].)

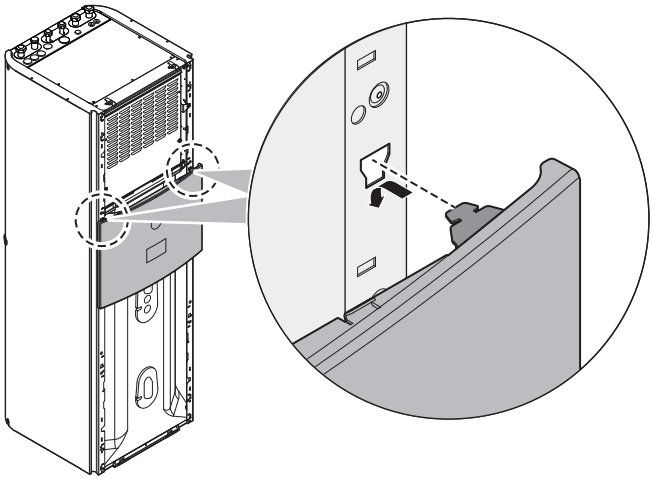

5 Remove the switch box cover.

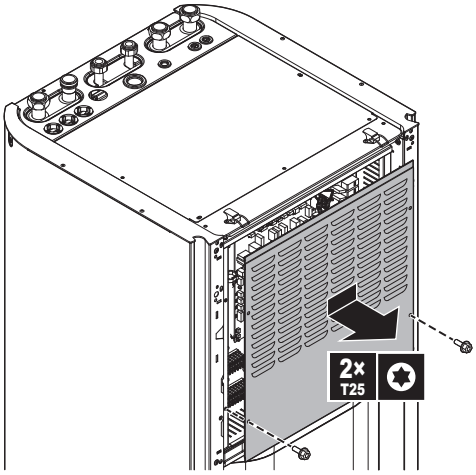

6 Rotate the switch box.

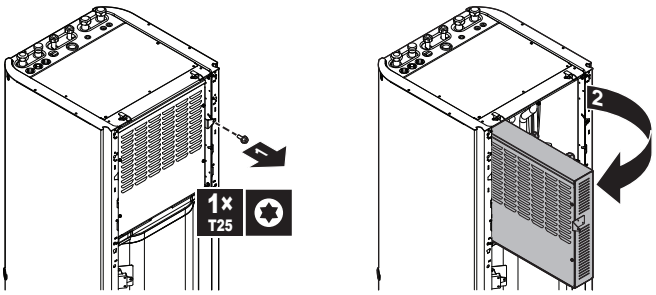

NOTICE

Do NOT put any force on the switch box to prevent the hinges from breaking. Do NOT put tools on it. Do NOT lean on it.

4.2.2 To close the indoor unit

1. Reinstall the switch box cover and close the switch box.
2. Reinstall the side panels.
3. Temporary place the user interface panel on top of the unit, then reinstall the front panel.
4. Reinstall the user interface panel.
5. Reinstall the top panel.

NOTICE

When closing the indoor unit, make sure that the tightening torque does NOT exceed 4.1 N•m.

4.3 Installing the indoor unit

4.3.1 To install the indoor unit

1. Lift the indoor unit from the pallet and place it on the floor. Also see "3.1.2 To handle the indoor unit" [▸ 5].
2. Connect the drain hose to the drain. See "4.3.2 To connect the drain hose to the drain" [▸ 7].
3. Slide the indoor unit into position.
4. Adjust the height of the leveling feet to compensate for floor irregularities. The maximum allowed deviation is 1°.

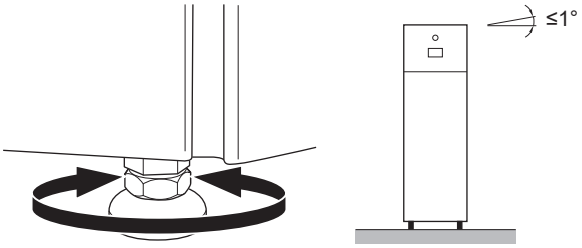

NOTICE

Do NOT tilt the unit forwards:

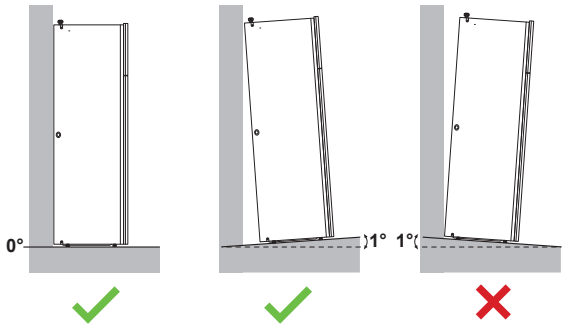

4.3.2 To connect the drain hose to the drain

Water coming from the pressure relief valve is collected in the drain pan. The drain pan is connected to a drain hose inside the unit. Connect the drain hose to an appropriate drain according to the applicable legislation. You can route the drain hose through the left or right side panel.

Prerequisite: The user interface panel and front panel have been removed.

1. Remove one of the side panels.
2. Cut out the rubber grommet.
3. Pull the drain hose through the hole.
4. Reattach the side panel. Ensure the water can flow through the drain tube.

It is recommended to use a tundish to collect the water.

Option 1: Through the left side panel

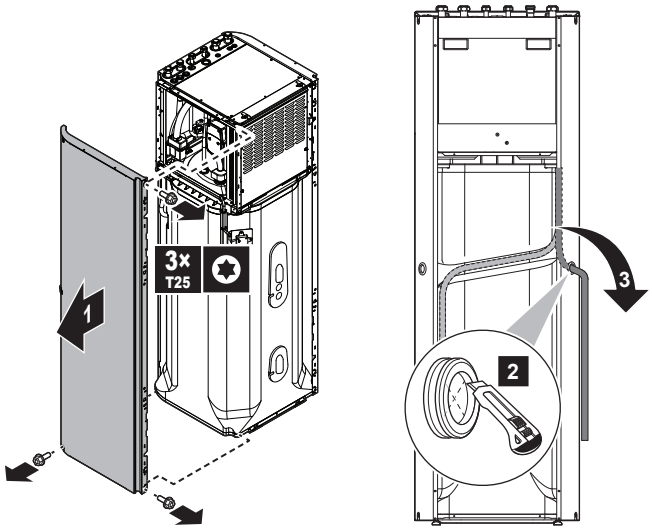

Option 2: Through the right side panel

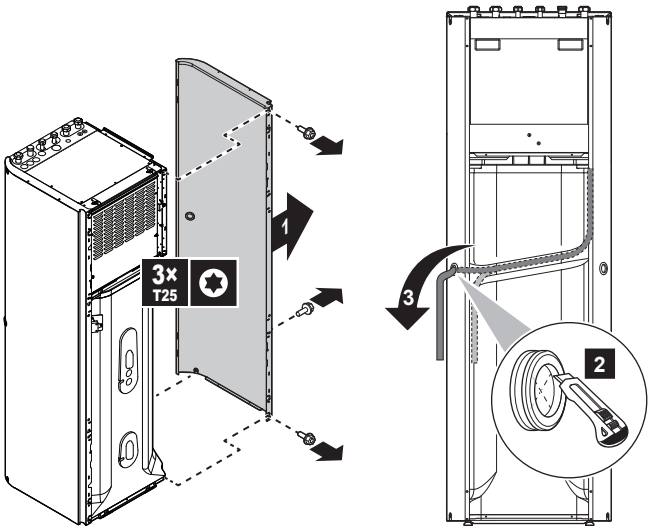

5 Piping installation

5.1 Preparing water piping

NOTICE

In case of plastic pipes, make sure they are fully oxygen diffusion tight according to DIN 4726. The diffusion of oxygen into the piping can lead to excessive corrosion.

NOTICE

Water circuit requirements. Make sure to comply with the water pressure and water temperature requirements below. For additional water circuit requirements, see the installer reference guide.

- **Water pressure – Domestic hot water.** The maximum water pressure is 10 bar (=1.0 MPa), and must be in accordance with the applicable legislation. Provide adequate safeguards in the water circuit to ensure that the maximum pressure is NOT exceeded (see "5.2.1 To connect the water piping" [▶ 9]). The minimum water pressure to operate is 1 bar (=0.1 MPa).
- **Water pressure – Space heating/cooling circuit.** The maximum water pressure is 3 bar (=0.3 MPa). Provide adequate safeguards in the water circuit to ensure that the maximum pressure is NOT exceeded. The minimum water pressure to operate is 1 bar (=0.1 MPa).
- **Water temperature.** All installed piping and piping accessories (valve, connections,…) MUST withstand the following temperatures:

INFORMATION

The following figure is an example and may NOT completely match your system layout.

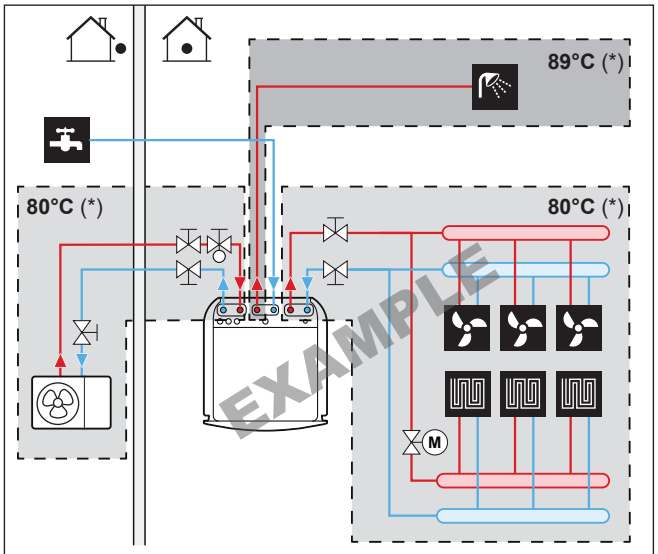

(*) Maximum temperature for piping and accessories

INFORMATION

The maximum leaving water temperature is decided based on setting [3.12] `Overheating setpoint`. This limit defines the maximum leaving water **in the system**. Depending on the value of this setting, the maximum LWT setpoint will also be reduced by 5°C to allow stable control towards the setpoint.

The maximum leaving water temperature **in the main zone** is decided based on setting [1.19] `Overheating water circuit`, only in case [3.13.5] `Bizone kit installed` is enabled. This limit defines the maximum leaving water **in the main zone**. Depending on the value of this setting, the maximum LWT setpoint will also be reduced by 5°C to allow stable control towards the setpoint.

5.1.1 To check the water volume and flow rate

Minimum water volume

The installation needs to be made in such a way that a minimum water volume (see table below) is always available in the space heating/cooling loop of the unit, even when the available volume towards the unit is reduced because of closure of valves (heat emitters, thermostatic valves, etc.) in the space heating/cooling circuit. The internal water volume of the outdoor unit is NOT considered for this minimum water volume.

If…	Then the minimum water volume is…
Cooling operation	For EPVX07: 13 l
Heating/defrost operation	For EPVX07 : 0 l

Maximum water volume

Use the following graph to determine the maximum water volume for the calculated pre-pressure.

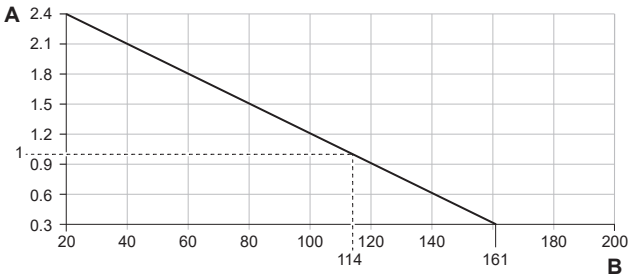

A Pre-pressure (bar)
B Maximum water volume (l)

Minimum flow rate

Check that the minimum flow rate in the installation is guaranteed in all conditions. For this purpose, use the differential pressure bypass valve delivered with the unit, and respect the minimum water volume.

If operation is…	Then the minimum flow rate is…
Cooling / heating start-up / defrost / backup heater operation	Required: ▪ For EPVX07: 20 l/min
Domestic hot water production	Recommended: 20 l/min.

NOTICE

When circulation in each or certain space heating loops is controlled by remotely controlled valves, it is important that the minimum flow rate is guaranteed, even if all valves are closed. In case the minimum flow rate cannot be reached, a flow error 7H will be generated.

See the installer reference guide for more information.

See the recommended procedure as described in "8.2 Checklist during commissioning" [▶ 32].

5.2 Connecting water piping

5.2.1 To connect the water piping

NOTICE

Do NOT use excessive force when connecting the field piping and make sure the piping is aligned properly. Deformed pipes can cause the unit to malfunction.

Delivered as accessory:

1 normally closed shut-off valve (+ quick clip)	To prevent refrigerant from entering the indoor unit in case of a refrigerant leak in the outdoor unit.
4 shut-off valves (+ O-rings)	To facilitate service and maintenance.
1 differential pressure bypass valve	To ensure the minimum flow rate (and prevent overpressure).

1 Install the normally closed shut-off valve (+ quick clip), and shut-off valves (+ O-rings) as follows:

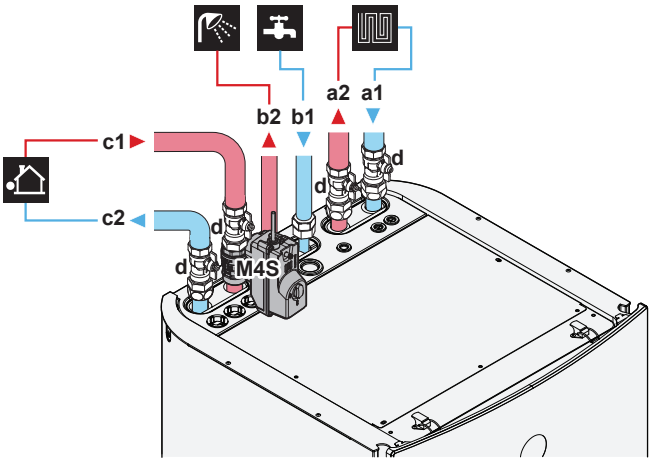

a1	Space heating/cooling – Water IN (screw connection, 1")
a2	Space heating/cooling – Water OUT (screw connection, 1")
b1	DHW – Cold water IN (screw connection, 3/4")
b2	DHW – Hot water OUT (screw connection, 3/4")
c1	Water IN from outdoor unit (screw connection, 1")
c2	Water OUT to outdoor unit (screw connection, 1")
d	Shut-off valve (+ O-rings)(male 1" – female 1")
M4S	Normally closed shut-off valve (+ quick clip)(inlet leak stop)(quick coupling – female 1")

2 Install the differential pressure bypass valve on the space heating water outlet.

3 Connect the domestic hot water IN and OUT pipes to the indoor unit. It is obligatory to use the accessory G3 kit EKUHWG3D to comply with UK legislation. See "5.2.2 To connect the water piping for domestic hot water" [▸ 10].

NOTICE

- It is recommended to install shut-off valves to domestic cold water in and domestic hot water out connections. These shut-off valves are field supplied.
- **However, make sure there is no valve between the pressure relief valve (field supply) and the DHW tank.**
- Select valves complying to EN 1487, EN 1488, EN 1489, EN 1490 and EN 1491.

NOTICE

A pressure relief valve with an opening pressure of maximum 10 bar (=1 MPa) must be installed on the domestic cold water inlet connection in accordance with the applicable legislation.

NOTICE

- A drain device and pressure relief device must be installed on the cold water inlet connection of the domestic hot water cylinder.
- To avoid back siphonage, it is recommended to install a non-return valve on the water inlet of the domestic hot water tank in accordance with the applicable legislation. Make sure it is NOT between the pressure relief valve and the DHW tank.
- It is recommended to install a pressure reducing valve on the cold water inlet in accordance with the applicable legislation.
- It is recommended to install an expansion vessel on the cold water inlet in accordance with the applicable legislation.
- It is recommended to install the pressure relief valve on a higher position than the top of the domestic hot water tank. Heating of the domestic hot water tank causes water to expand and without pressure relief valve the water pressure inside the tank can rise above the tank design pressure. Also the field installation (piping, tapping points, etc.) connected to the tank is subjected to this high pressure. To prevent this, a pressure relief valve needs to be installed. The overpressure prevention depends on the correct operation of the field installed pressure relief valve. If this is NOT working correctly, overpressure will deform the tank and water leakage may occur. To confirm good operation, regular maintenance is required.

NOTICE

Differential pressure bypass valve (delivered as accessory). We recommend to install the differential pressure bypass valve in the space heating water circuit.

- Mind the minimum water volume when choosing the installation location of the differential pressure bypass valve (at the indoor unit, or at the collector). See "5.1.1 To check the water volume and flow rate" [▸ 8].
- Mind the minimum flow rate when adjusting the differential pressure bypass valve setting. See "5.1.1 To check the water volume and flow rate" [▸ 8] and "8.2.4 To check the minimum flow rate" [▸ 34].

NOTICE

Install air purge valves at all local high points.

5.2.2 To connect the water piping for domestic hot water

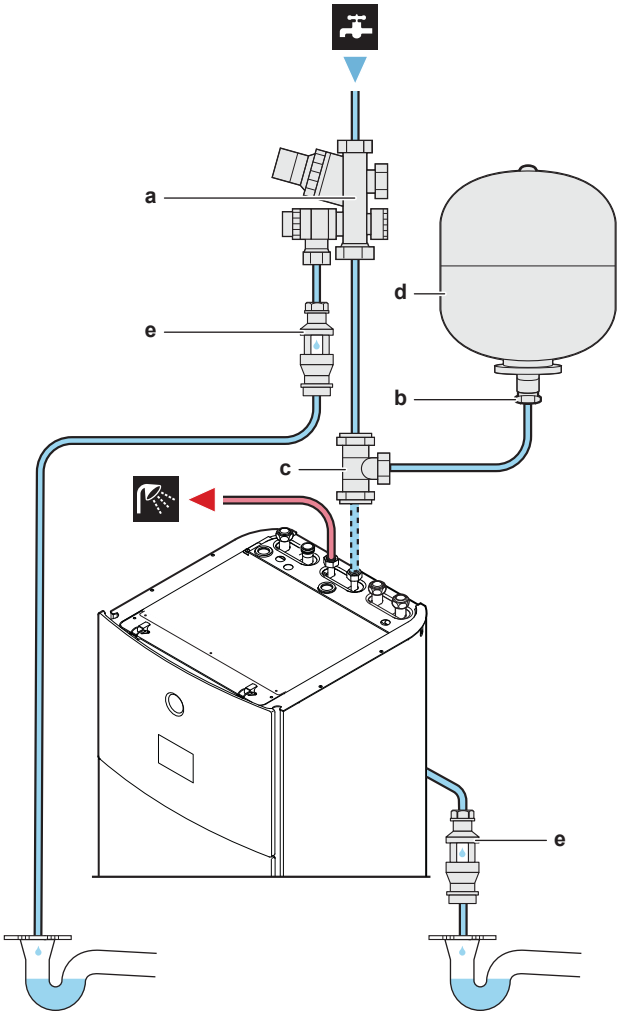

- **a** Pressure reducing valve/pressure relief valve combination. Water inlet and water outlet 22 mm connection, discharge piping connection 15 mm
- **b** Adaptor 22 mm×3/4" Female BSP
- **c** T-piece 22 mm×22 mm×22 mm
- **d** Expansion vessel of 18 l – 3/4" Male BSP
- **e** Tundish 15 mm inlet, 22 mm outlet

1 Pre-assemble the adaptor and expansion vessel so that the expansion vessel is ready for installation.

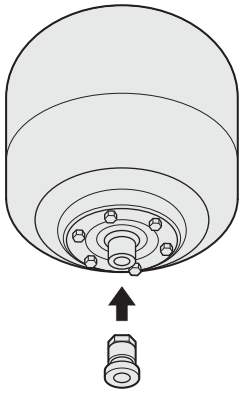

2 Mount the expansion vessel to the wall.

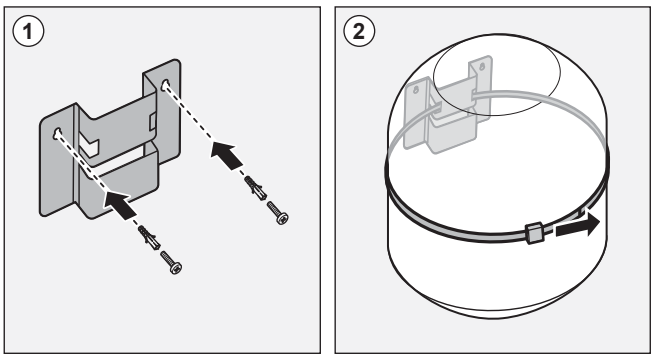

3 Fit the T-piece (part of the kit) to the domestic hot water cold water IN pipe of the unit.

4 Connect the pressure reducing valve/pressure relief valve combination (part of the kit) to the T-piece with a length of copper tube Ø22 mm (field supply).

5 Connect the expansion vessel to the T-piece with a length of copper tube Ø22 mm (field supply).

6 Connect the pressure reducing valve/pressure relief valve combination to the water mains inlet.

7 Install the tundish (part of the kit) in a vertical position within a maximum of 600 mm away from the pressure reducing valve/pressure relief valve combination.

WARNING

Install the tundish away from any electrical device. **Possible consequence:** Electrical shock or fire.

NOTICE

To ensure a free water flow through the discharge pipe, manually operate the pressure relief valve by turning its knob left.

8 Using the accessory brass compression coupler (see "3.2.1 To remove the accessories from the domestic hot water tank kit" [▶ 5]), connect the accessory pipe (see "3.1.1 To remove the accessories from the indoor unit" [▶ 4]) to the pipe connection located at the back of the unit. This pipe starts at the pressure relief valve of the domestic hot water tank.

NOTICE: Risk of condensation

The discharge pipe coming out of the indoor unit MUST be completely insulated:

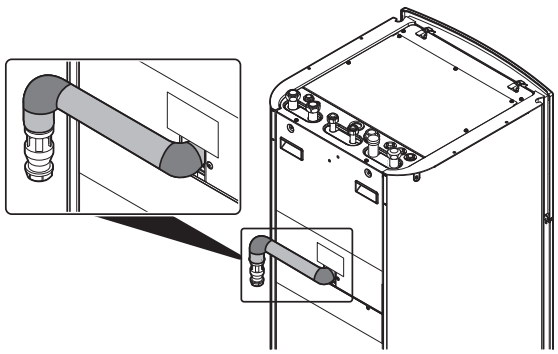

9 Connect the two tundishes (one from the pressure relief valve of the domestic hot water tank, and one from the pressure relief valve of the domestic hot water tank kit) to an appropriate drain according to the applicable legislation. The following example shows discharge below fixed grating (Building Regulation G3 section 3.61 gives alternative points of discharge):

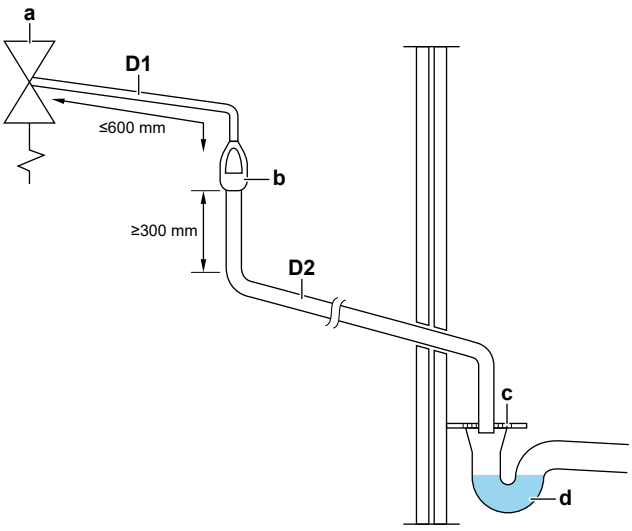

- **a** Safety device (pressure and temperature relief valve of domestic hot water tank; pressure relief valve of domestic hot water tank kit)
- **b** Tundish
- **c** Fixed grating
- **d** Trapped gully
- **D1** Metal discharge pipe from safety device to tundish
- **D2** Discharge pipe from tundish, with continuous fall. See Building Regulation G3 section 3.56, Table 03 and worked example.

10 After completing the installation, the installer MUST fill out the warning label on the tank with indelible ink, in order to comply with the building regulations. The warning label can be found in the vicinity of the nameplate.

WARNING TO USER

a. Do not remove or adjust any component of this unvented water heater; contact the installer.

b. If this unvented water heater develops a fault, such as a flow of hot water from the discharge pipe, switch the heater off and contact the installer.

WARNING TO INSTALLER

a. This installation is subject to the Building Regulations.

b. Use only appropriate components for installation or maintenance.

Installed by:

Name .....

Address .....

Tel. No. .....

Completion date .....

WARNING

The discharge pipes from the pressure relief valves MUST terminate in a safe and visible position without forming any risk to persons in the vicinity.

WARNING

- Discharge piping, tundish, drain valves, etc. MUST be positioned away from any electrical components.
- The discharge pipe away from the tundish MUST terminate in a safe, visible position without forming any risk to persons in the vicinity.

WARNING

- Do NOT install any valves between the domestic hot water tank and relief valves/expansion vessel.
- Do NOT install shut-off valves between the expansion relief valve and the domestic hot water tank.

5.2.3 To connect the recirculation piping

Prerequisite: Only required if you need recirculation in your system.

1. Remove the top panel from the unit, see "4.2.1 To open the indoor unit" [▶ 6].
2. Cut out the rubber grommet on top of the unit, and remove the stop. The recirculation connector is placed below the hole.
3. Route the recirculation piping through the grommet and connect it to the recirculation connector.

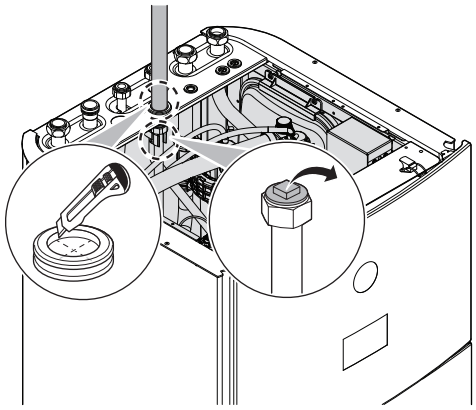

4. Reattach the top panel.

5.2.4 To fill the water circuit

See the installation manual of the indoor unit, or the installer reference guide.

5.2.5 To protect the water circuit against freezing

About freeze protection

Frost can damage the system. To prevent the hydraulic components from freezing, the unit is equipped with the following:

- The software is equipped with special frost protection functions such as water pipe freeze prevention that include the activation of a pump in case of low temperatures. However, in case of a power failure, these functions cannot guarantee protection.
- The outdoor unit is equipped with two factory mounted freeze protection valves. Freeze protection valves drain the water from the outdoor unit before it can freeze and damage the unit. This is to prevent R290 leaks in the outdoor unit. **Note:** The factory mounted freeze protection valves are designed to protect the outdoor unit, not the field piping.

To ensure protection of field piping, install **additional freeze protection valves** at all lowest points of the field piping. Insulate these field installed freeze protection valves in a similar way as the water piping, but do NOT insulate the inlet and outlet (release) of these valves.

Optionally, you can install **normally closed valves** (located indoors near the piping entry/exit points). These valves can prevent that all water from the indoor piping is drained when the freeze protection valves open. **Note:** The normally closed shut-off valve that is delivered as accessory with the indoor unit, which is mandatory to install on the indoor unit for safety reasons (inlet leak stop), does NOT prevent drainage of the indoor piping when the freeze protection valves open. For this, you need additional normally closed valves (optional).

For more information, see the installer reference guide.

NOTICE

When freeze protection valves are installed, set the minimum cooling setpoint (default=7°C) at least 2°C higher than the maximum opening temperature of the freeze protection valves (the opening temperature of the factory-mounted freeze protection valves is 3°C ±1).

If you set the minimum cooling setpoint lower than the safe value (i.e. maximum opening temperature of freeze protection valves + 2°C), you risk that the freeze protection valves open when cooling to the minimum setpoint.

INFORMATION

The minimum leaving water temperature is decided based on setting [3.11] `Undercooling setpoint`. This limit defines the minimum leaving water **in the system**. Depending on the value of this setting, the minimum LWT setpoint will also be increased by 4°C to allow stable control towards the setpoint.

The minimum leaving water temperature **in the main zone** is decided based on setting [1.20] `Undercooling water circuit`, only in case [3.13.5] `Bizone kit installed` is enabled. This limit defines the minimum leaving water **in the main zone**. Depending on the value of this setting, the minimum LWT setpoint will also be increased by 4°C to allow stable control towards the setpoint.

WARNING

Adding anti-freeze solutions (e.g. glycol) to the water is NOT allowed.

5.2.6 To fill the domestic hot water tank

1. Open every hot water tap in turn to purge air from the system pipe work.
2. Open the cold water supply valve.
3. Close all water taps after all air is purged.
4. Check for water leaks.

5.2.7 To insulate the water piping

The piping in the complete water circuit MUST be insulated to prevent condensation during cooling operation and reduction of the heating and cooling capacity.

Outdoor water piping insulation

See the installation manual of the outdoor unit, or the installer reference guide.

6 Electrical installation

DANGER: RISK OF ELECTROCUTION

WARNING

- All wiring MUST be performed by an authorised electrician and MUST comply with the applicable national wiring regulation.
- Make electrical connections to the fixed wiring.
- All components procured on-site and all electrical construction MUST comply with the applicable legislation.

WARNING

ALWAYS use multicore cable for power supply cables.

WARNING

If the supply cord is damaged, it MUST be replaced by the manufacturer, its service agent or similarly qualified persons in order to avoid a hazard.

CAUTION

Do NOT push or place redundant cable length into the unit.

NOTICE

The distance between the high voltage and low voltage cables should be at least 50 mm.

NOTICE

It is recommended to install a residual current device (RCD) having a rated residual operating current NOT exceeding 30 mA.

INFORMATION

When installing field supply or option cables, foresee sufficient cable length. This will make it possible to open the switch box and gain access to other components during service.

6.1 About electrical compliance

Only for the backup heater of the indoor unit

See "6.4.3 To connect the backup heater power supply" [▶ 17].

6.2 Guidelines when connecting the electrical wiring

NOTICE

We recommend using solid wires. If stranded wires are used, slightly twist the strands to consolidate the end of the conductor for either direct use in the terminal clamp or insertion in a round crimp-style terminal. Details are described in "Guidelines when connecting the electrical wiring" in the installer reference guide.

Tightening torques

Indoor unit:

Item	Tightening torque (N•m)
M3.5 (X42M, X44M, X45M)	0.88 ±10%
M4 (X40M, X41M)	1.47 ±10%
M4 (earth)	1.47 ±10%

6.3 `Field IO` connections

When connecting the electrical wiring, for certain components, you can choose which terminal pins to use. After connection, you must tell the user interface which terminal pins you used so that it matches your system layout:

- Preferably, via the breadcrumbs in [13] `Field IO`.
- Alternatively, via the field codes (see the field settings table in the installer reference guide).

1	**Choose which terminal pins to use for which component.**

1a	In case of `Field IO` inputs: Choose between the standard possibilities (❶❷❸❹❺ as shown in the respective topics of "6.4 Connections to the indoor unit" [▸ 14] and in the addendum book for optional equipment). For example: 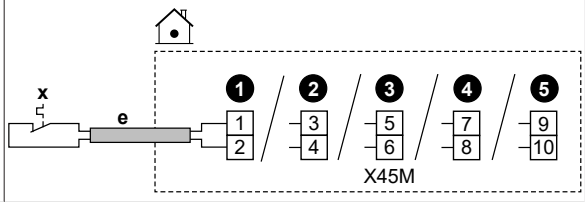
1b	In case of `Field IO` outputs: You have multiple options.
1b.1	**Option 1** (**preferred**; only possible if the running current and/or inrush current of the connected component does NOT exceed the maximum running current and/or inrush current of the terminals as listed in the respective topic)**:** Choose between the standard possibilities (❶❷❸❹ as shown in the respective topics of "6.4 Connections to the indoor unit" [▸ 14] and in the addendum book for optional equipment). For example: ▪ Maximum running current and/or inrush current of respective terminals = 0.3 A ▪ Maximum running current and/or inrush current of connected component is ≤0.3 A 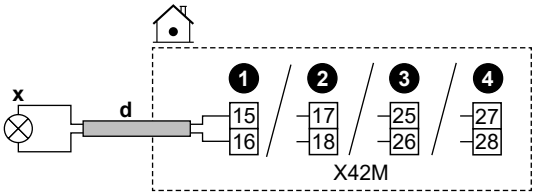
1b.2	**Option 2** (in case the running current and/or inrush current of the connected component exceeds the maximum running current and/or inrush current of the terminals as listed in the respective topic): Choose between the standard possibilities (❶❷❸❹ as shown in the respective topics of "6.4 Connections to the indoor unit" [▸ 14] and in the addendum book for optional equipment), but instead of directly connecting to the component, install a relay (field supply) with an external power supply outside of the switch box in-between. For example: ▪ Maximum running current and/or inrush current of respective terminals = 0.3 A ▪ Maximum running current and/or inrush current of connected component is >0.3 A 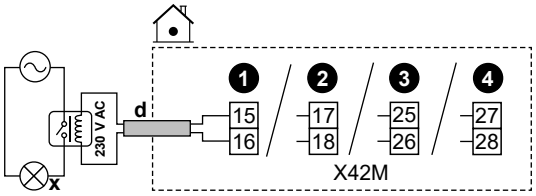
1b.3	**Option 3**: Alternatively, instead of choosing one of the standard possibilities (❶❷❸❹), you can use the terminal pins of any of the other `Field IO` outputs. However, you must also check if the running current and/or inrush current of the connected component exceeds the maximum running current and/or inrush current of the terminals as listed in the respective topic. If exceeded, you must install a relay in-between (similar to **Option 2**).
2	**Tell the user interface which terminal pins you used for which component.**

2.1	Go to [13] `Field IO`.
2.2	Select the used terminal block. **Result:** The screen with the connections on that terminal block is shown. For example: 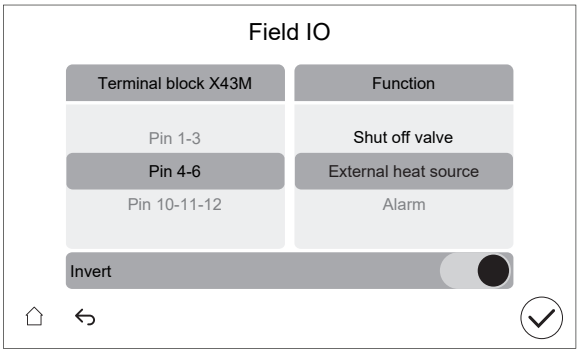
2.3	On the left, select the used terminal pins.
2.4	On the right, select the connected component: ▪ `Field IO` inputs (see table below) ▪ `Field IO` outputs (see table below)
2.5	Set whether the logic has to be inverted: **Note:** not all terminals / connected options can be inverted. If the selection is possible or not is visible in [13] `Field IO`.

If the component is…	Then set…
Normally open	`Invert` = OFF
Normally closed	`Invert` = ON

NOTICE

`Invert` **setting for shut-off valves:**

If you connect the shut-off valve (normally open or normally closed) according to one of the standard possibilities (❶❷❸❹), then in [13] `Field IO`, do NOT invert the logic (i.e. keep `Invert` = OFF).

If you connect the shut-off valve according to the terminal pins of any other `Field IO` output, then in [13] `Field IO`:

- In case of normally open shut-off valves: Do NOT invert the logic (i.e. keep `Invert` = OFF).

- In case of normally closed shut-off valves: Invert the logic (i.e. set `Invert` = ON).

Field IO inputs

If the connected component is…	Then select `Function` = …
Remote outdoor sensor. See addendum book for optional equipment (and "6.4 Connections to the indoor unit" [▸ 14]).	`External outdoor sensor`
Remote indoor sensor. See addendum book for optional equipment (and "6.4 Connections to the indoor unit" [▸ 14]).	`External indoor sensor`
Smart Grid contacts. See "6.4.14 Smart Grid" [▸ 22].	`HV/LV Smart Grid Contact 1` `HV/LV Smart Grid Contact 2`
Preferential kWh rate power supply contact. See "6.4.2 To connect the main power supply" [▸ 16].	`HP Tariff Contact`
Safety thermostats for unit. See "6.4.13 To connect the safety thermostat" [▸ 21].	`Safety thermostat unit`
Smart Grid meter contact. See "6.4.14 Smart Grid" [▸ 22].	`Smart Meter Contact`

Field IO outputs

If the connected component is…	Then select `Function` = …
Shut-off valves for main zone and additional zone. See "6.4.5 To connect the shut-off valve" [▶ 19]	`Main zone shut-off valve`
	`Add. zone shut-off valve`
Alarm output. See "6.4.8 To connect the alarm output" [▶ 20].	`Alarm`
Changeover to external heat source. See "6.4.10 To connect the changeover to external heat source" [▶ 20].	`External heat source`
Bivalent bypass valve. See "6.4.11 To connect the bivalent bypass valve" [▶ 21].	`Bivalent bypass valve`
Space cooling/heating operation ON/OFF output for the main zone or additional zone. See "6.4.9 To connect the space cooling/heating ON/OFF output" [▶ 20].	`Cooling/Heating mode`
Heat pump convectors. See addendum book for optional equipment (and "6.4 Connections to the indoor unit" [▶ 14]).	
DHW pump + extra external pumps. See "6.4.6 To connect the pumps (DHW pump and/or external pumps)" [▶ 20].	`DHW pump`
	`C/H secondary pump`
	`C/H pump ext. main`
	`C/H pump ext. add.`
DHW ON signal. See "6.4.7 To connect the domestic hot water ON signal" [▶ 20].	`DHW On signal`

6.4 Connections to the indoor unit

Item	Description
Power supply (main)	See "6.4.2 To connect the main power supply" [▶ 16].
Power supply (backup heater)	See "6.4.3 To connect the backup heater power supply" [▶ 17].
Normally closed shut-off valve (inlet leak stop)	See "6.4.4 To connect the normally closed shut-off valve (inlet leak stop)" [▶ 19].
Shut-off valve	See "6.4.5 To connect the shut-off valve" [▶ 19].
Domestic hot water pump or external pumps	See "6.4.6 To connect the pumps (DHW pump and/or external pumps)" [▶ 20]
Domestic hot water ON signal	See "6.4.7 To connect the domestic hot water ON signal" [▶ 20]
Alarm output	See "6.4.8 To connect the alarm output" [▶ 20].
Space cooling/heating operation control	See "6.4.9 To connect the space cooling/heating ON/OFF output" [▶ 20].
Changeover to external heat source control	See "6.4.10 To connect the changeover to external heat source" [▶ 20].
Bivalent bypass valve	See "6.4.11 To connect the bivalent bypass valve" [▶ 21]
Electricity meters	See "6.4.12 To connect the electricity meters" [▶ 21].
Safety thermostat	See "6.4.13 To connect the safety thermostat" [▶ 21].
Smart Grid	See "6.4.14 Smart Grid" [▶ 22].
WLAN cartridge	See "6.4.15 To connect the WLAN cartridge (delivered as accessory)" [▶ 23].
Ethernet (Modbus) cable	See "6.4.16 To connect the Ethernet (Modbus) cable" [▶ 23].
Room thermostat (wired or wireless)	See below table.
	Wires: 0.75 mm² Maximum running current: 100 mA
	MMI For the main zone: ▪ [1.12] `Control` ▪ [1.13] `External room thermostat` For the additional zone: ▪ [2.12] `Control` ▪ [2.13] `External room thermostat`
Heat pump convector	There are different controllers and setups possible for the heat pump convectors. Depending on the setup, implement a relay (field supply, see addendum book for optional equipment). For more information, see: ▪ Installation manual of the heat pump convectors ▪ Installation manual of the heat pump convector options ▪ Addendum book for optional equipment
	Wires: 0.75 mm² Maximum running current: 100 mA This is a `Field IO` output connection. See "6.3 `Field IO` connections" [▶ 12].
	MMI [13] `Field IO` (`Cooling/Heating mode`) For the main zone: ▪ [1.12] `Control` ▪ [1.13] `External room thermostat` For the additional zone: ▪ [2.12] `Control` ▪ [2.13] `External room thermostat`

Item	Description
Remote outdoor sensor	See: ▪ Installation manual of the remote outdoor sensor ▪ Addendum book for optional equipment
	Wires: 2×0.75 mm² This is a `Field IO` input connection. See "6.3 `Field IO` connections" [▶ 12].
	MMI [13] `Field IO (External outdoor sensor)` [5.22] `External ambient sensor offset`
Remote indoor sensor	See: ▪ Installation manual of the remote indoor sensor ▪ Addendum book for optional equipment
	Wires: 2×0.75 mm² This is a `Field IO` input connection. See "6.3 `Field IO` connections" [▶ 12].
	MMI [13] `Field IO (External indoor sensor)` [1.33] `External room sensor offset`
Human Comfort Interface	See: ▪ Installation and operation manual of the Human Comfort Interface ▪ Addendum book for optional equipment
	Wires: 2×(0.75~1.25 mm²) Maximum length: 500 m
	MMI [1.12] `Control` [1.38] `Room sensor offset`
Bizone kit	See: ▪ Installation manual of the bizone kit ▪ Addendum book for optional equipment
	Use the cable delivered with the bizone kit.
	MMI [3.13.5] `Bizone kit installed`

For the room thermostat (wired or wireless):

In case of…	See…
Wireless room thermostat	▪ Installation manual of the wireless room thermostat ▪ Addendum book for optional equipment
Wired room thermostat without multi-zoning base unit	▪ Installation manual of the wired room thermostat ▪ Addendum book for optional equipment

Wired room thermostat with multi-zoning base unit	▪ Installation manual of the wired room thermostat (digital or analogue) + multi-zoning base unit
	▪ Addendum book for optional equipment
	▪ In this case:
	  ▪ Connect the wired room thermostat (digital or analogue) to the multi-zoning base unit
	  ▪ Connect the multi-zoning base unit to the outdoor unit
	  ▪ For cooling/heating operation, implement a relay (field supply, see addendum book for optional equipment)

6.4.1 To connect the electrical wiring to the indoor unit

Opening the unit

See "4.2.1 To open the indoor unit" [▶ 6].

Cable routing

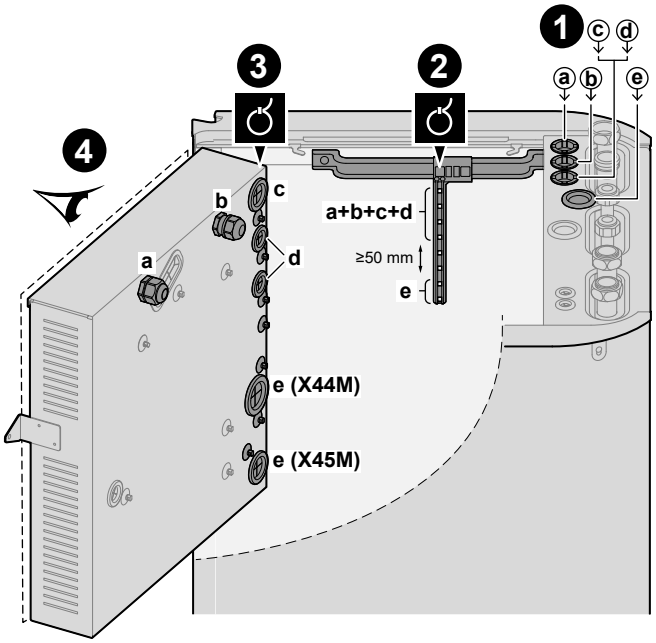

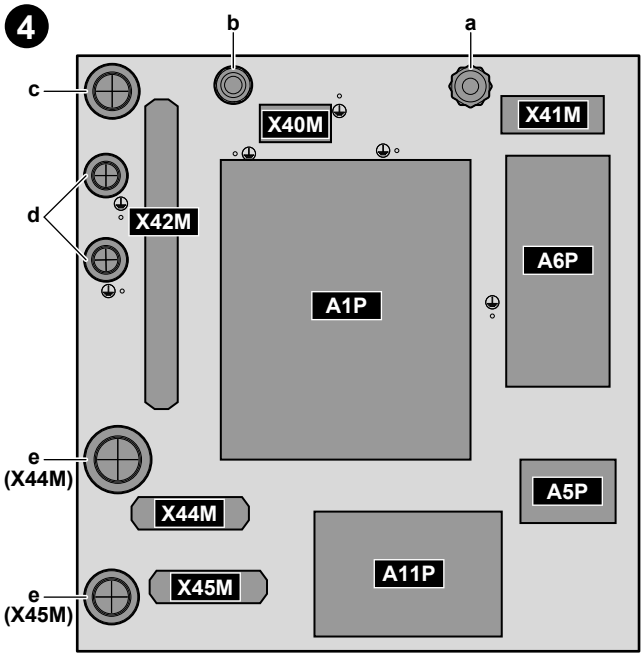

❶	Entry into the unit (from the top)
❷	Strain relief (cable ties)
❸	Entry into the switch box (from the back) + strain relief (cable ties or cable glands)
❹	Terminal blocks and PCBs (inside the switch box): ▪ A1P: Hydro PCB ▪ A5P: Power supply PCB ▪ A6P: Multistep backup heater PCB ▪ A11P: Interface PCB

Cables

Note: For the Ethernet (Modbus) cable, see "6.4.16 To connect the Ethernet (Modbus) cable" [▸ 23].

#	Cable	Terminal block
a	Backup heater power supply	X41M
b	Interconnection cable (= main power supply)	X40M
c	Normal kWh rate power supply for the indoor unit (in case the outdoor unit is connected to a preferential kWh rate power supply)	X42M
d	High voltage options: ▪ Heat pump convector (option kit) ▪ Room thermostat (option kit) ▪ Shut-off valve (field supply) ▪ Domestic hot water pump + extra external pumps (field supply) ▪ DHW ON signal (field supply) ▪ Alarm output (field supply) ▪ Changeover to external heat source control (field supply) ▪ Bivalent bypass pass (field supply) ▪ Space heat/cool operation control (field supply) ▪ Smart Grid (high voltage contacts) (field supply)	X42M
e	Low voltage options: ▪ Preferential power supply contact (field supply) ▪ Human Comfort Interface (option kit) ▪ Outdoor ambient temperature sensor (option kit) ▪ Indoor ambient temperature sensor (option kit) ▪ Electricity meters (field supply) ▪ Safety thermostat (field supply) ▪ Smart Grid (field supply)	X44M+X45M

INFORMATION

When installing field supply or option cables, foresee sufficient cable length. This will make it possible to remove/reposition the switch box and gain access to other components during service.

CAUTION

Do NOT push or place redundant cable length into the unit.

6.4.2 To connect the main power supply

NOTICE

The pump is equipped with an anti-blockage safety routine. This means that the pump operates for a short period of time every 24 hours during long periods of inactivity to ensure it does not get stuck. To enable this function, the unit must be connected to the power supply all year round.

This topic describes 2 possible ways to connect the main power supply:

- In case of normal kWh rate power supply
- In case of preferential kWh rate power supply

In case the outdoor unit is connected to a normal kWh rate power supply

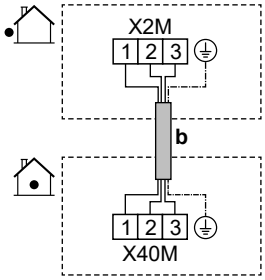

	b	Interconnection cable (= main power supply) (outdoor unit connected to a normal kWh rate power supply)	▪ Follow cable route ⓑ→ in "6.4.1 To connect the electrical wiring to the indoor unit" [▸ 15]. ▪ Wires: (3+GND)×1.5 mm²
MMI	—		

In case the outdoor unit is connected to a preferential kWh rate power supply

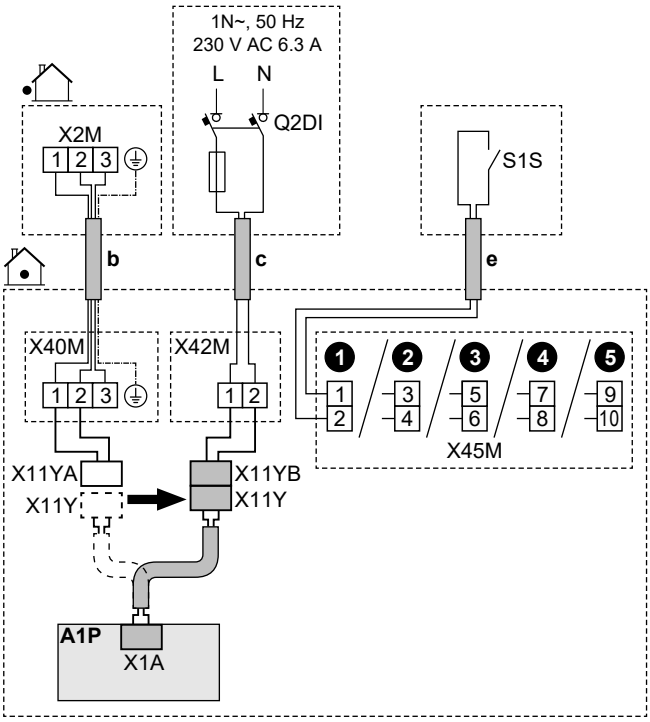

	b	Interconnection cable (= main power supply) (outdoor unit connected to a preferential kWh rate power supply)	▪ Follow cable route ⓑ→ in "6.4.1 To connect the electrical wiring to the indoor unit" [▸ 15]. ▪ Wires: (3+GND)×1.5 mm²
	c	Normal kWh rate power supply for the indoor unit	▪ Follow cable route ⓒ→ in "6.4.1 To connect the electrical wiring to the indoor unit" [▸ 15]. ▪ Wires: 2×1.5 mm² ▪ Maximum running current: 6.3 A ▪ Q2DI: Earth leakage circuit breaker ▪ Recommended field fuse: 16 A
	e	Preferential kWh rate power supply contact (S1S)	▪ Follow cable route ⓔ→ in "6.4.1 To connect the electrical wiring to the indoor unit" [▸ 15]. ▪ Wires: 2×(0.75~1.25 mm²) ▪ Maximum length: 50 m. ▪ Preferential kWh rate power supply contact: 16 V DC detection (voltage supplied by PCB). The voltage-free contact shall ensure the minimum applicable load of 15 V DC, 10 mA. ▪ This is a `Field IO` input connection. See "6.3 `Field IO` connections" [▸ 12].
	X11Y	▪ Disconnect X11Y from X11YA. ▪ Connect X11Y to X11YB.	
MMI		▪ [13] `Field IO` (`HP Tariff Contact`) ▪ [9.14.1] `Operation mode` (`Heat pump tariff`)	

6.4.3 To connect the backup heater power supply

WARNING

The backup heater MUST have a dedicated power supply and MUST be protected by the safety devices required by the applicable legislation.

WARNING

Take care when installing a fuse <10 A.

Refer to setting [10.8] `Configuration wizard - Backup heater` so a correct limitation is applied.

CAUTION

To guarantee the unit is completely earthed, ALWAYS connect the backup heater power supply and the earth cable.

NOTICE

If the backup heater is not powered, then:

- Space heating and tank heat-up is not allowed.
- Error AA-01 (`Backup heater overheated or BUH power cable not connected`) is generated.

NOTICE

The output of the backup heater depends on the wiring and the selection in the user interface. Make sure that the power supply matches the selection in the user interface.

Possible layouts

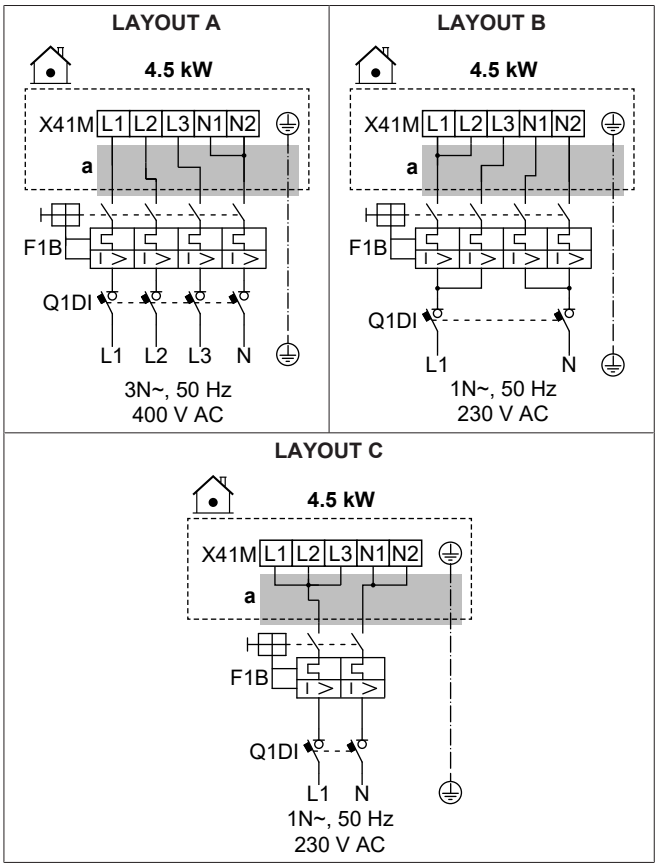

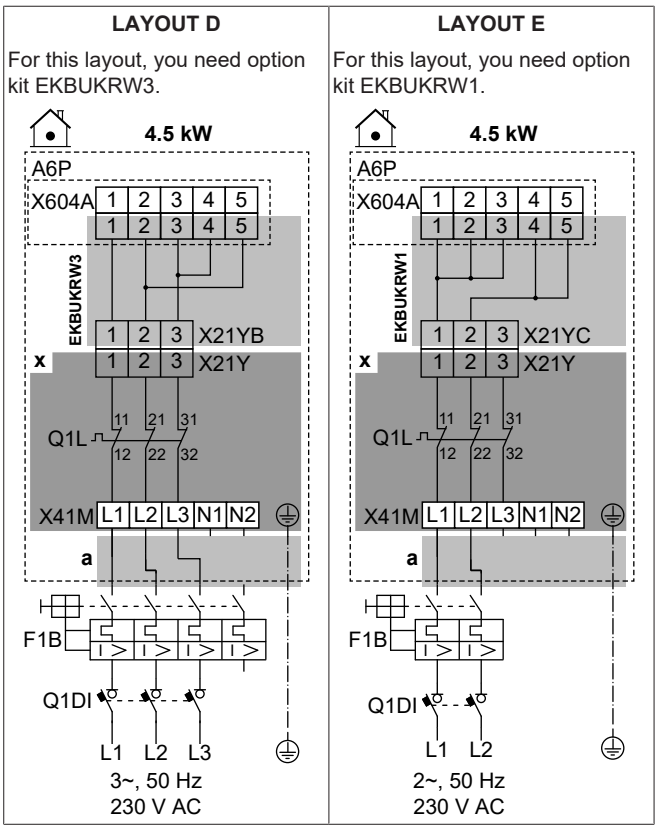

	a	Follow cable route ⓐ→ in "6.4.1 To connect the electrical wiring to the indoor unit" [▶ 15].
	x	Factory-mounted
	EKBUKRW1	Option kit: Backup heater wire harness for a 2-phase 230 V without N power supply. To be used instead of the factory-mounted wire harness (with connector X21YA).
	EKBUKRW3	Option kit: Backup heater wire harness for a 3-phase 230 V without N power supply. To be used instead of the factory-mounted wire harness (with connector X21YA).
	F1B	Overcurrent fuse (field supply)
	Q1DI	Earth leakage circuit breaker (field supply)
	Q1L	Thermal protector backup heater
MMI	[5.5] `Backup heater`	

Specifications of wiring components

Component		LAYOUT				
		A	B	C	D	E
Power supply	Voltage	390-410 V	220-240 V			
	Power	4.5 kW				
	Rated current	6.5 A	13 A	19.6	17 A[(a)]	19.6 A[(a)]
	Phase	3N~	1N~		3~	2~
	Frequency	50 Hz				
Wire size		MUST comply with national wiring regulation				
		Wire size based on the current, but minimum 2.5 mm²		Min. 4 mm²	Wire size based on the current, but minimum 2.5 mm²	Min. 4 mm²
		5-core cable		3-core cable	4-core cable	3-core cable
		3L+N+GND	2L+2N+GND	L+N+GND	3L+GND	2L+GND
Recommended overcurrent fuse		4-pole 10A	4-pole 16A	2-pole 25A	4-pole 20A	2-pole 25A
Earth leakage circuit breaker		MUST comply with national wiring regulation				

[(a)] Electrical equipment complying with EN/IEC 61000-3-12 (European/International Technical Standard setting the limits for harmonic currents produced by equipment connected to public low-voltage systems with input current >16 A and ≤75 A per phase).

6.4.4 To connect the normally closed shut-off valve (inlet leak stop)

NOTICE

The shut-off valve (inlet leak stop) is equipped with an anti-blockage safety routine. To enable this routine, the unit must be connected to the power supply all year round. This routine operates as follows every 14 days after the last execution:

- If the unit is not operational, the anti-blockage safety routine is executed (i.e. the valve closes for a short period of time).
- If the unit is operational, the anti-blockage safety routine is postponed for a maximum of 7 days. If the unit is still operational after these 7 days, the unit will be temporarily forced to stop in order to execute the anti-blockage safety routine.

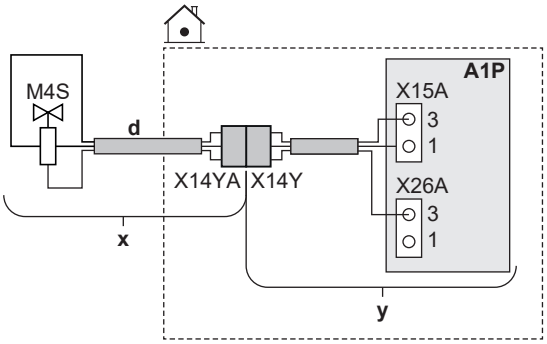

	x	Delivered as accessory
	y	Factory-mounted
	d	Follow cable route ⓓ→ in "6.4.1 To connect the electrical wiring to the indoor unit" [▸ 15].
	M4S	Normally closed shut-off valve (inlet leak stop)
	X14Y	Connect X14YA to X14Y.
MMI	—	

6.4.5 To connect the shut-off valve

INFORMATION

Shut-off valve usage example. In case of one LWT zone, and a combination of underfloor heating and heat pump convectors, install a shut-off valve before the underfloor heating to prevent condensation on the floor during cooling operation.

NOTICE

Wiring is different for a NC (normally closed) valve and a NO (normally open) valve.

NOTICE

`Invert` **setting for shut-off valves:**

If you connect the shut-off valve (normally open or normally closed) according to one of the standard possibilities (❶❷❸❹), then in [13] `Field IO`, do NOT invert the logic (i.e. keep `Invert` = OFF).

If you connect the shut-off valve according to the terminal pins of any other `Field IO` output, then in [13] `Field IO`:

- In case of normally open shut-off valves: Do NOT invert the logic (i.e. keep `Invert` = OFF).

- In case of normally closed shut-off valves: Invert the logic (i.e. set `Invert` = ON).

In case of normally closed shut-off valves

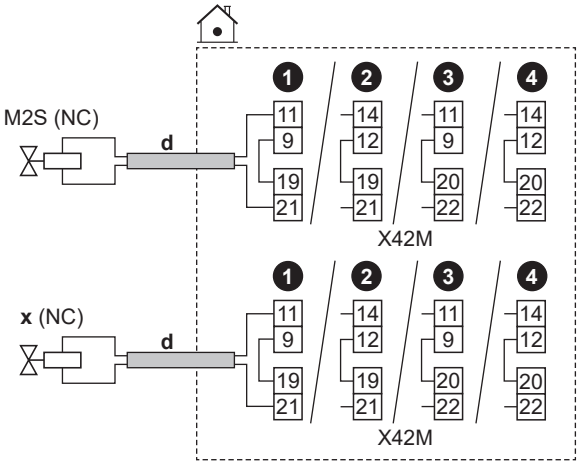

In case of normally open shut-off valves

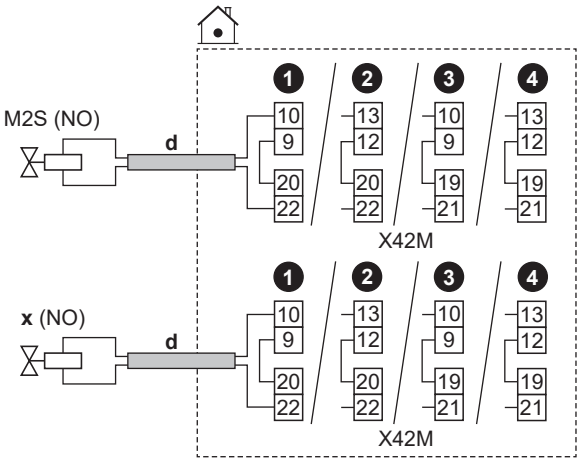

	d	▪ Follow cable route ⓓ→ in "6.4.1 To connect the electrical wiring to the indoor unit" [▸ 15]. ▪ Wires: (2 + bridge)×0.75 mm² ▪ This is a `Field IO` output connection. See "6.3 `Field IO` connections" [▸ 12].	
	M2S	Shut-off valve for the main zone	▪ Maximum running current: 0.3 A ▪ 230 V AC supplied by PCB
	x	Shut-off valve for the additional zone	
	NC	Normally closed	
	NO	Normally open	
MMI	▪ [13] `Field IO`: ▪ `Main zone shut-off valve` ▪ `Add. zone shut-off valve`		

6.4.6 To connect the pumps (DHW pump and/or external pumps)

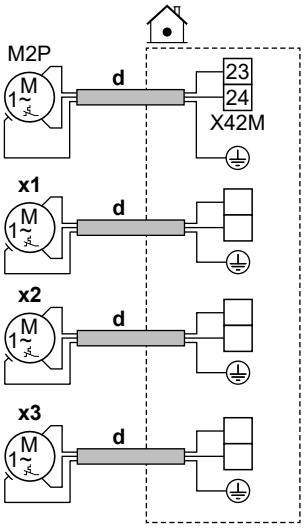

	d	▪ Follow cable route ⓓ→ in "6.4.1 To connect the electrical wiring to the indoor unit" [▸ 15]. ▪ Wires: (2+GND)×0.75 mm² ▪ This is a `Field IO` output connection. See "6.3 `Field IO` connections" [▸ 12].
	M2P	DHW pump: ▪ Maximum load: 2 A (inrush), 230 V AC, 1 A (continuous)
	x1 x2 x3	Extra external pumps — Use the terminal pins of any of the other `Field IO` outputs. However, you must also check if you need to install a relay in-between.
MMI	▪ [13] `Field IO` ▪ `DHW pump`: Pump used for instant hot water and/or disinfection operation. In this case you must also specify the functionality in setting [4.13] `DHW pump`: * `Instant hot water` * `Disinfection` * `Both` ▪ `C/H secondary pump`: Pump runs when there is a request from the main or additional zone. ▪ `C/H pump ext. main`: Pump runs when there is a request from the main zone. ▪ `C/H pump ext. add.`: Pump runs when there is a request from the additional zone. ▪ [4.26] `DHW pump schedule`	

6.4.7 To connect the domestic hot water ON signal

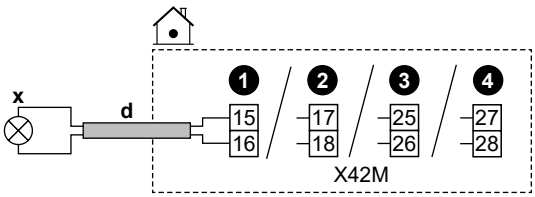

	d	▪ Follow cable route ⓓ→ in "6.4.1 To connect the electrical wiring to the indoor unit" [▸ 15]. ▪ Wires: 2×0.75 mm² ▪ This is a `Field IO` output connection. See "6.3 `Field IO` connections" [▸ 12].
	x	Domestic hot water ON signal (= unit is running in DHW operation): ▪ Maximum load: 0.3 A, 250 V AC
MMI	▪ [13] `Field IO` (`DHW On signal`)	

6.4.8 To connect the alarm output

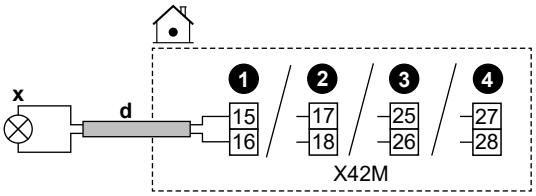

	d	▪ Follow cable route ⓓ→ in "6.4.1 To connect the electrical wiring to the indoor unit" [▸ 15]. ▪ Wires: 2×0.75 mm² ▪ This is a `Field IO` output connection. See "6.3 `Field IO` connections" [▸ 12].
	x	Alarm output: ▪ Maximum load: 0.3 A, 250 V AC
MMI	▪ [13] `Field IO` (`Alarm`)	

6.4.9 To connect the space cooling/heating ON/OFF output

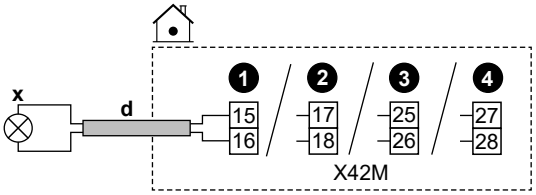

	d	▪ Follow cable route ⓓ→ in "6.4.1 To connect the electrical wiring to the indoor unit" [▸ 15]. ▪ Wires: 2×0.75 mm² ▪ This is a `Field IO` output connection. See "6.3 `Field IO` connections" [▸ 12].
	x	Space cooling/heating ON/OFF output: ▪ Maximum load: 0.3 A, 250 V AC
MMI	▪ [13] `Field IO` (`Cooling/Heating mode`)	

6.4.10 To connect the changeover to external heat source

INFORMATION

Bivalent is only possible in case of 1 leaving water temperature zone with:

- room thermostat control, OR
- external room thermostat control.

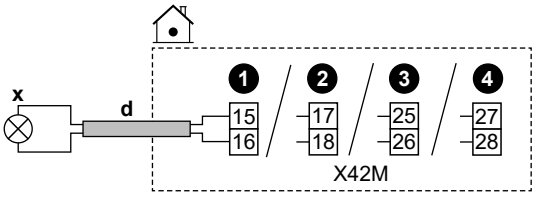

	d	▪ Follow cable route ⓓ→ in "6.4.1 To connect the electrical wiring to the indoor unit" [▸ 15]. ▪ Wires: 2×0.75 mm² ▪ This is a `Field IO` output connection. See "6.3 `Field IO` connections" [▸ 12].
	x	Changeover to external heat source: ▪ Maximum load: 0.3 A, 250 V AC ▪ Minimum load: 20 mA, 5 V DC
MMI		▪ [13] `Field IO` (`External heat source`) ▪ [5.14] `Bivalent` ▪ [5.37] `Bivalent present` (ON)

6.4.11 To connect the bivalent bypass valve

NOTICE

Wiring is different for a NC (normally closed) valve and a NO (normally open) valve.

In case of normally closed bivalent bypass valves

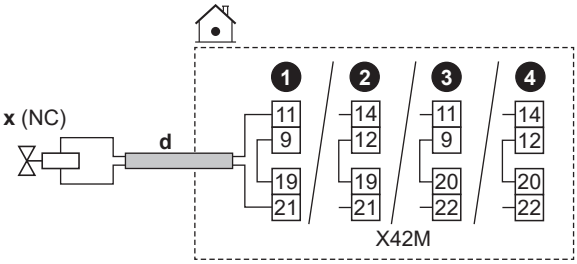

In case of normally open bivalent bypass valves

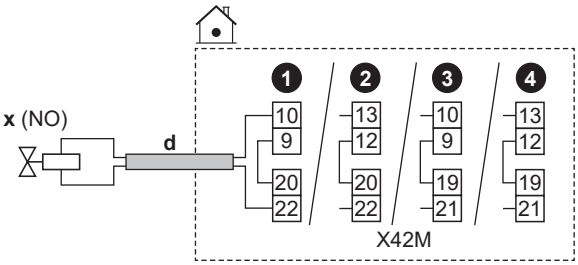

	d	▪ Follow cable route ⓓ→ in "6.4.1 To connect the electrical wiring to the indoor unit" [▸ 15]. ▪ Wires: (2 + bridge)×0.75 mm² ▪ This is a `Field IO` output connection. See "6.3 `Field IO` connections" [▸ 12].
	x	Bivalent bypass valve (activated when bivalent is active): ▪ Maximum running current: 0.3 A ▪ 230 V AC supplied by PCB
	NC	Normally closed
	NO	Normally open
MMI		▪ [13] `Field IO` (`Bivalent bypass valve`) ▪ [5.14] `Bivalent` ▪ [5.37] `Bivalent present` (ON)

6.4.12 To connect the electricity meters

INFORMATION

This functionality is NOT available in early versions of the user interface software.

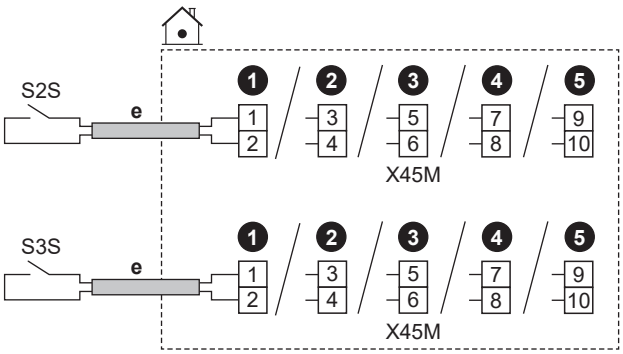

	e	▪ Follow cable route ⓔ→ in "6.4.1 To connect the electrical wiring to the indoor unit" [▸ 15]. ▪ Wires: 2 (per meter)×0.75 mm² ▪ This is a `Field IO` input connection. See "6.3 `Field IO` connections" [▸ 12].	
	S2S	Electricity meter 1	12 V DC pulse detection (voltage supplied by PCB)
	S3S	Electricity meter 2	
MMI			

6.4.13 To connect the safety thermostat

Connect a safety thermostat to the unit, to prevent that too high temperatures go to the respective zone.

Remark: In case of 2 LWT zones with a bizone kit, you need to connect a second safety thermostat (for the main zone) to the bizone kit control box (EKMIKPOA), to prevent that too high temperatures go to the main zone.

For more information about the safety thermostat for the main zone, see the application guidelines in the installer reference guide.

NOTICE

Make sure to select and install the safety thermostat according to the applicable legislation.

In any case, to prevent unnecessary tripping of the safety thermostat, we recommend the following:

- The safety thermostat is automatically resettable.
- The safety thermostat has a maximum temperature variation rate of 2°C/min.
- The safety thermostat tripping point should be selected in line with the overheating limit.
- There is a minimum distance of 2 m between the safety thermostat and the 3-way valve.

INFORMATION

The maximum leaving water temperature is decided based on setting [3.12] `Overheating setpoint`. This limit defines the maximum leaving water **in the system**. Depending on the value of this setting, the maximum LWT setpoint will also be reduced by 5°C to allow stable control towards the setpoint.

The maximum leaving water temperature **in the main zone** is decided based on setting [1.19] `Overheating water circuit`, only in case [3.13.5] `Bizone kit installed` is enabled. This limit defines the maximum leaving water **in the main zone**. Depending on the value of this setting, the maximum LWT setpoint will also be reduced by 5°C to allow stable control towards the setpoint.

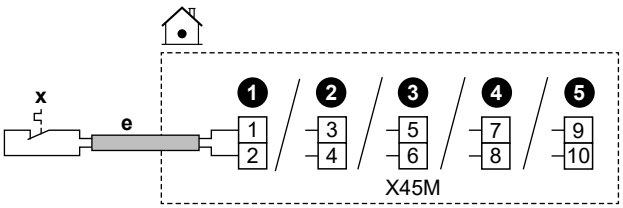

	e	▪ Follow cable route ⓔ→ in "6.4.1 To connect the electrical wiring to the indoor unit" [▸ 15]. ▪ Wires: 2×0.75 mm² ▪ Maximum length: 50 m ▪ This is a `Field IO` input connection. See "6.3 `Field IO` connections" [▸ 12].	
	x	Safety thermostat contact for the unit	16 V DC detection (voltage supplied by PCB). The voltage-free contact shall ensure the minimum applicable load of 15 V DC, 10 mA.
MMI	[13] `Field IO (Safety thermostat unit)`		

6.4.14 Smart Grid

INFORMATION

The Smart Grid photovoltaic power pulse meter (S4S) functionality is NOT available in early versions of the user interface software.

This topic describes different ways to connect the indoor unit to a Smart Grid:

Smart Grid contacts: ▪ In case of low voltage Smart Grid contacts. ▪ In case of high voltage Smart Grid contacts. This requires the installation of **2 relays** from the Smart Grid relay kit (EKRELSG).	The 2 incoming Smart Grid contacts can activate the following Smart Grid modes: **1** / **2** / **Operation mode** 0 / 0 / `Free running` 0 / 1 / `Forced off` 1 / 0 / `Recommended on` 1 / 1 / `Forced on`
Smart Grid meter: ▪ In case of low voltage Smart Grid meter. ▪ In case of high voltage Smart Grid meter. This requires the installation of **1 relay** from the Smart Grid relay kit (EKRELSG).	If the Smart Grid meter is active, the heat pump and the additional electrical heat sources are allowed to operate if the limit allows it. **Note:** ▪ It is possible that in some cases this limit towards the heat pump will be ignored for reliability reasons (e.g. heat pump start-up and defrost). ▪ If the backup heater needs to support for protective reasons, the backup heater will kick in with at least a capacity of 2 kW (to ensure reliable operation) even if the power limit would be exceeded.

The related settings in case of **Smart Grid contacts** are as follows:

- [13] `Field IO`:
  - `HV/LV Smart Grid Contact 1`
  - `HV/LV Smart Grid Contact 2`
- [9.14] `Demand response`
- [9.14.1] `Operation mode (Smart grid ready contacts)`

The related settings in case of **Smart Grid meter** are as follows:

- [13] `Field IO (Smart Meter Contact)`
- [9.14.1] `Operation mode (Smart Meter Contact)`
- [9.14.7] `Smart meter limit`

Connections in case of low voltage Smart Grid contacts

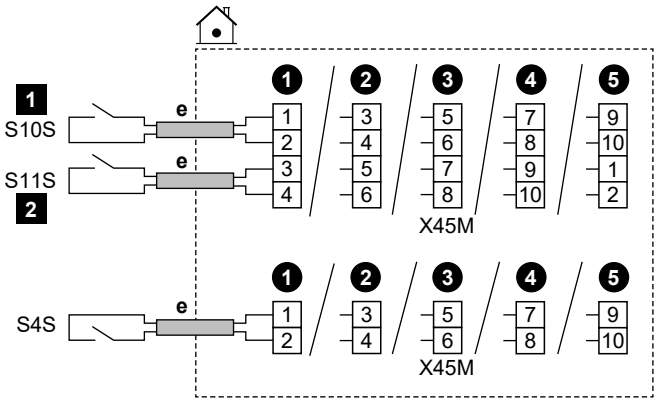

	e	▪ Follow cable route ⓔ→ in "6.4.1 To connect the electrical wiring to the indoor unit" [▸ 15]. ▪ Wires: 0.5 mm² ▪ This is a `Field IO` input connection. See "6.3 `Field IO` connections" [▸ 12].
	S4S	Smart Grid photovoltaic power pulse meter
	S10S / **1**	Low voltage Smart Grid contact 1
	S11S / **2**	Low voltage Smart Grid contact 2

Connections in case of high voltage Smart Grid contacts

1 Install 2 relays from the Smart Grid relay kit (EKRELSG) as follows:

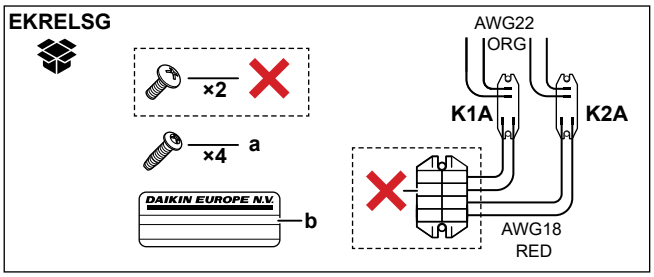

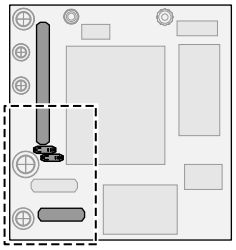

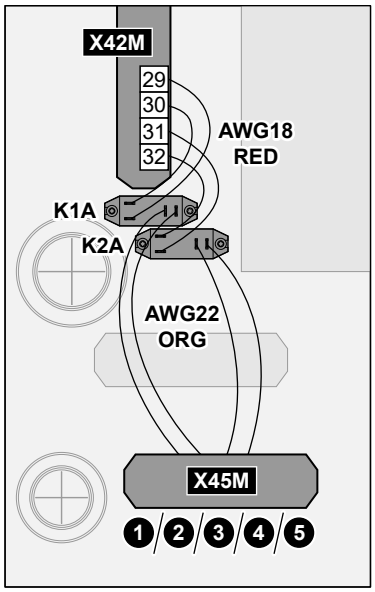

	a	Screws for K1A and K2A
	b	Sticker to put on the high voltage wires
	AWG22 ORG	Wires (AWG22 orange) coming from the contact sides of the relays; to be connected to X45M
	AWG18 RED	Wires (AWG18 red) coming from the coil sides of the relays; to be connected to X42M
	K1A, K2A	Relays
	✕	NOT needed

2 Connect as follows:

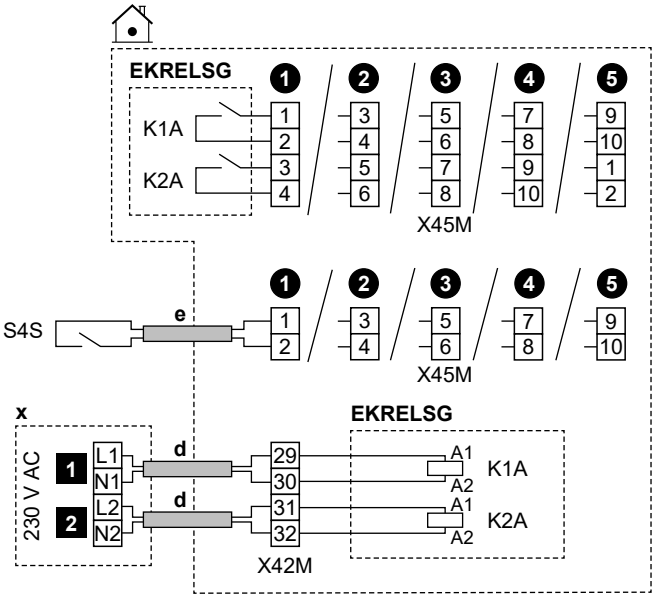

	d	▪ Follow cable route ⓓ→ in "6.4.1 To connect the electrical wiring to the indoor unit" [▸ 15]. ▪ Wires: 1 mm²
	e	▪ Follow cable route ⓔ→ in "6.4.1 To connect the electrical wiring to the indoor unit" [▸ 15]. ▪ Wires: 0.5 mm²
	x	230 V AC control device
	EKRELSG	Smart Grid relay kit This is a `Field IO` input connection. See "6.3 `Field IO` connections" [▸ 12].
	S4S	Smart Grid photovoltaic power pulse meter This is a `Field IO` input connection. See "6.3 `Field IO` connections" [▸ 12].
	1	High voltage Smart Grid contact 1
	2	High voltage Smart Grid contact 2

Connections in case of low voltage Smart Grid meter

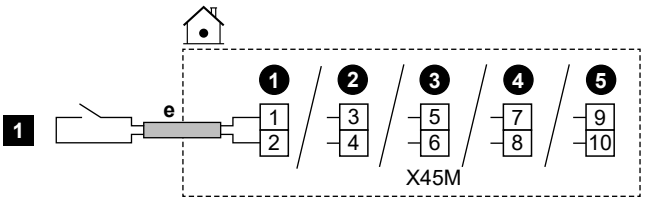

	e	▪ Follow cable route ⓔ→ in "6.4.1 To connect the electrical wiring to the indoor unit" [▸ 15]. ▪ Wires: 0.5 mm² ▪ This is a `Field IO` input connection. See "6.3 `Field IO` connections" [▸ 12].
	1	Low voltage Smart Grid meter

Connections in case of high voltage Smart Grid meter

1 Install 1 relay (K1A) from the Smart Grid relay kit (EKRELSG). (see above: Connections in case of high voltage Smart Grid contacts).

2 Connect as follows:

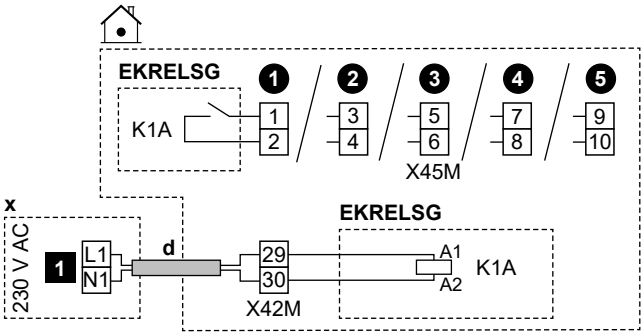

	d	▪ Follow cable route ⓓ→ in "6.4.1 To connect the electrical wiring to the indoor unit" [▸ 15]. ▪ Wires: 1 mm²
	x	230 V AC control device
	EKRELSG	Smart Grid relay kit This is a `Field IO` input connection. See "6.3 `Field IO` connections" [▸ 12].
	1	High voltage Smart Grid meter

6.4.15 To connect the WLAN cartridge (delivered as accessory)

MMI	[8.3] `Wireless gateway`

1 Insert the WLAN cartridge into the cartridge slot on the user interface of the indoor unit.

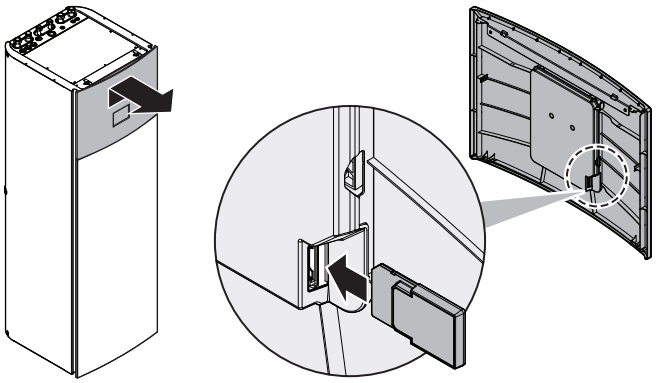

6.4.16 To connect the Ethernet (Modbus) cable

Use minimum Cat 6a Ethernet cable with the following features:

- U/UTP (= unshielded)
- Connector: RJ45 male to RJ45 male

Note:

- It is recommended that the cable includes (moulded) strain relief to prevent damage in tight routing spaces.
- Maximum cable length: 100 m.

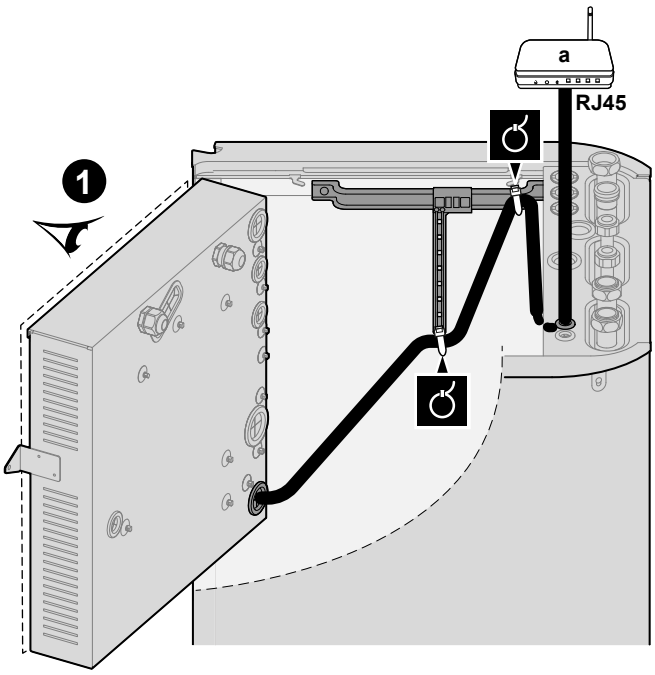

a Home router

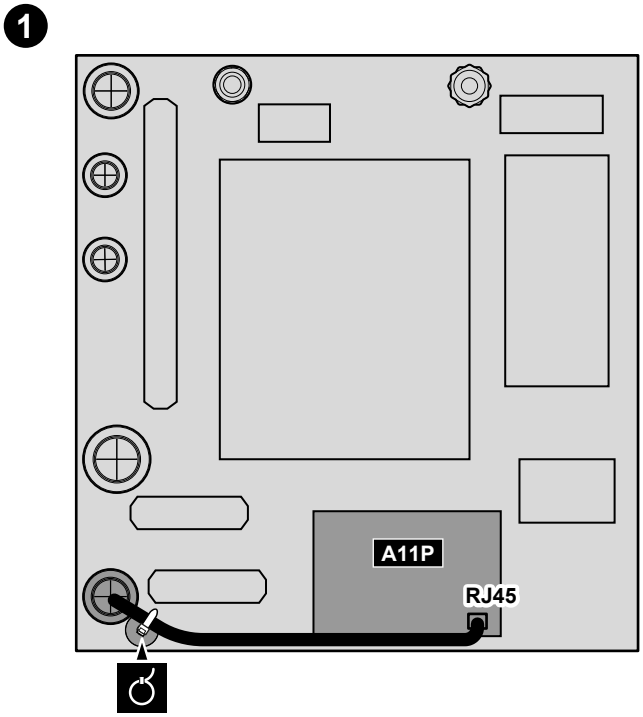

7 Configuration

This chapter explains only basic configuration done via the configuration wizard. For more detailed explanation and background information, see the configuration reference guide.

User mode vs. Installer mode

On the home screen, and most other screens where applicable, you can toggle between user mode and installer mode.

	User mode
	Installer mode. Pin code: 5678

Menu structure vs. Overview field settings

You can access the installer settings using two different methods. However, NOT all settings are accessible via both methods.

Via the menu structure (with breadcrumbs):

1 From the home screen, use the navigation buttons 〈 ⌂ ○ ○ 〉.

2 Go to any of the menus:

[1] `Main zone`	[8] `Connectivity`
[2] `Additional zone`	[9] `Energy`
[3] `Space heating/cooling`	[10] `Configuration wizard`
[4] `Domestic hot water`	[11] `Malfunctioning`
[5] `Settings`	[12] NOT USED
[6] `Information`	[13] `Field IO`
[7] `Maintenance mode`	

Via the overview of the field settings:

1 Go to [5.7]: `Settings` > `Overview field settings`.

2 Go to the wanted field setting. Where applicable, the field setting codes are described in the configuration reference guide. **Example:** Go to **005** for the water pipe freeze prevention function. Field codes that are not applicable are greyed out.

3 Select the wanted value.

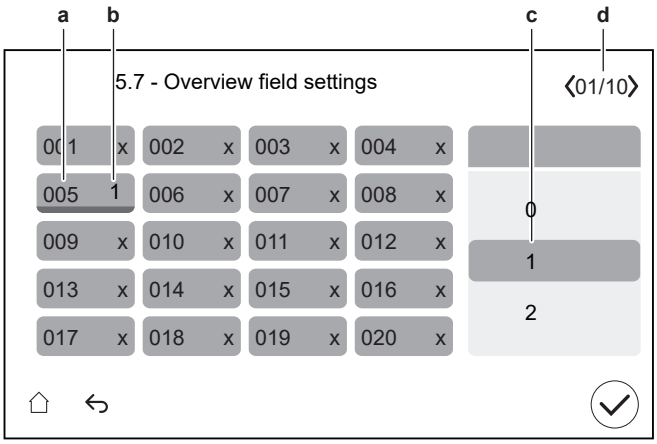

a Field setting code
b Selected value
c To select the wanted value
d To browse through the different pages

7.1 Configuration wizard

After first power ON of the system, the user interface starts a configuration wizard. Use this wizard to set the most important initial settings for the unit to run properly.

- If needed, you can restart the configuration wizard via the menu structure: [10] `Configuration wizard`.
- If needed, you can afterwards configure more settings via the menu structure.

Configuration wizard – Overview

Depending on your unit type and the selected settings, some steps will not be visible.

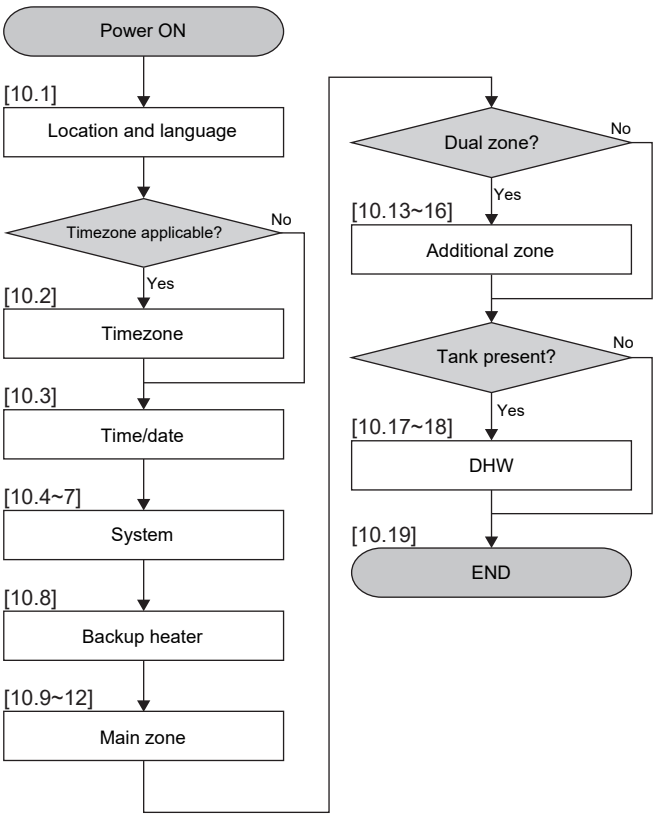

After you completed all steps in the wizard, the user interface will show an error message instructing to enter the Digital Key (i.e. perform the unlocking procedure). See "8.2.1 To unlock the outdoor unit (compressor)" [▸ 32].

[10.1] Location and language

Set:

- Country (this also defines the timezone if the selected country only has one timezone)
- Language

[10.2] Timezone

Restriction: This screen is only shown when there are multiple time zones within a country.

Set Timezone.

[10.3] Time/date

Set:

- Date
- Clock format (24 hours or AM/PM)
- Time
- Daylight savings time (ON/OFF)

[10.4] System 1/4

Set:

- Number of zones
- Bivalent
- DHW Tank (not applicable for floor-standing units)
- DHW Tank type (not applicable for floor-standing units)

Number of zones

The system can supply leaving water to up to 2 water temperature zones. During configuration, the number of water zones must be set.

- Single zone

  Only one leaving water temperature zone.

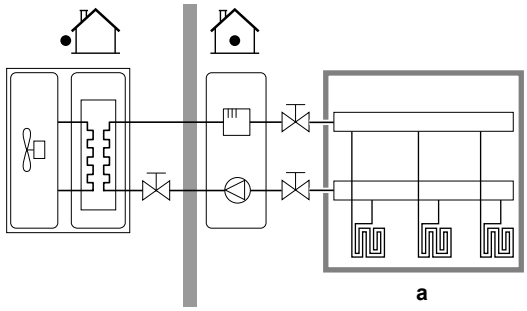

a Main LWT zone

- Dual zone

  Two leaving water temperature zones. In heating, the main leaving water temperature zone consists of the lowest temperature heat emitters and a mixing station to achieve the desired leaving water temperature.

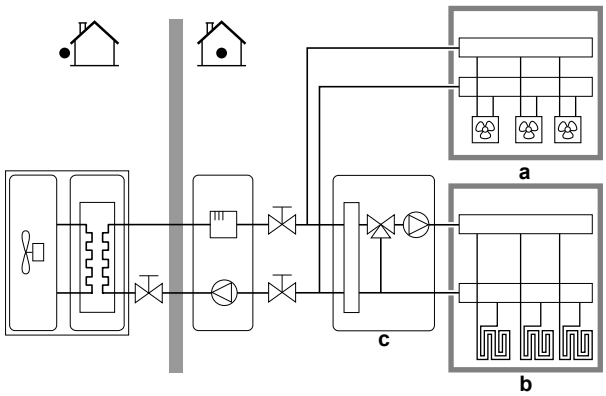

a Additional LWT zone: Highest temperature

b Main LWT zone: Lowest temperature

c Mixing station

INFORMATION

Mixing station. If your system layout contains 2 LWT zones, you can install a mixing station in front of the main LWT zone. However, other dual zone applications with shut-off valves are also possible. For more information, see the application guidelines in the installer reference guide.

NOTICE

NOT configuring the system in the following way can cause damage to the heat emitters. If there are 2 zones, it is important that in heating:

- the zone with the lowest water temperature is configured as the main zone, and
- the zone with the highest water temperature is configured as the additional zone.

NOTICE

If there are 2 zones and the emitter types are wrongly configured, water of high temperature can be sent towards a low temperature emitter (underfloor heating). To avoid this:

- Install an aquastat/thermostatic valve to avoid too high temperatures towards a low temperature emitter.
- Make sure you set the emitter types for the main zone and for the additional zone correctly in accordance with the connected emitter.

Bivalent

Must match your system layout. Is an external heat source (bivalent) installed? For more information, see the application guidelines in the installer reference guide, and the settings in the configuration reference guide ([5.14] `Bivalent`).
ON (installed) / OFF (not installed)

DHW Tank[(a)]

Must match your system layout. DHW tank installed?
ON (installed) / OFF (not installed)

[(a)] Not required for floor-standing or ECH_2O units.

DHW Tank type

Read-only.
▪ `Integrated`: The backup heater will also be used for domestic hot water heating.

[10.5] System 2/4

Not applicable.

[10.6] System 3/4

Not applicable.

[10.7] System 4/4

Set `Emergency selection`.

Emergency selection

When a heat pump failure occurs, then this setting (same as setting [5.23]) defines whether the electrical heater (backup heater / booster heater / tank boiler if applicable) can take over the space heating and DHW operation. When there is no automatic full take-over by the electrical heater, a pop-up (with the same content as setting [5.30]) appears where you can manually acknowledge that the electrical heater can fully take over (i.e. space heating to normal setpoint and DHW operation = ON). When the house is unattended for longer periods, we recommend to use `auto SH reduced/DHW off` to keep energy consumption low.

[5.23]	When heat pump failure occurs, then there is … by the electrical heater	Full take-over
`Manual`	No take-over: ▪ Space heating = OFF ▪ DHW operation = OFF	After manual acknowledgment
`Automatic`	Full take-over: ▪ Space heating to normal setpoint ▪ DHW operation = ON	Automatic
`auto SH reduced/DHW on`	Partial take-over: ▪ Space heating to reduced setpoint ▪ DHW operation = ON	After manual acknowledgment
`auto SH reduced/DHW off`	Partial take-over: ▪ Space heating to reduced setpoint ▪ DHW operation = OFF	After manual acknowledgment
`auto SH normal/DHW off`	Partial take-over: ▪ Space heating to normal setpoint ▪ DHW operation = OFF	After manual acknowledgment

INFORMATION

If a heat pump failure occurs and `Emergency selection` is NOT set to `Automatic`, the following functions will remain active even if the user does NOT acknowledge emergency operation:

- Room frost protection
- Underfloor heating screed dryout
- Water pipe freeze prevention
- Disinfection

[10.8] Backup heater

Set:

- `Grid configuration`:
  - `Single phase`
  - `Three phase 3x400V+N`
  - `Three phase 3x230V`
- `Maximum capacity`:
  - Slider limited depending on grid configuration and fuse. **Note:** During defrost operation, the backup heater support may go up to the maximum capacity defined here. If needed, you can limit this value (but not lower than 2 kW to ensure reliable operation).
- `Fuse >10A` (ON/OFF)

The maximum capacity suggested by the user interface is based on the selected grid configuration and, if applicable, the size of the fuse. An installer can however lower the maximum capacity of the backup heater using the scroll list. The table below gives an overview of the dynamic maximums of the scroll list.

Grid configuration	Fuse >10A	Maximum capacity
`Single phase`	(greyed out)	Limited to 4.5 kW[(a)]
`Three phase 3x400V+N`	OFF	
	ON	
`Three phase 3x230V`	(greyed out)	

[(a)] But not lower than 2 kW.

[10.9] Main zone 1/4

Set:

- `Emitter type`
- `Control`

Emitter type

Must match your system layout. Emitter type of the main zone.
▪ `Under floor heating` ▪ `Heat pump convector` ▪ `Radiator`

The setting `Emitter type` influences the target delta T in heating as follows:

`Emitter type Main zone`	Target delta T in heating
`Under floor heating`	3~10°C
`Heat pump convector`	3~10°C
`Radiator`	10~20°C

Heating up or cooling down the main zone can take longer. This depends on:

- The water volume of the system
- The heater emitter type of the main zone

NOTICE

Average emitter temperature = Leaving water temperature – (Delta T)/2

This means that for a same leaving water temperature setpoint, the average emitter temperature of radiators is lower than that of underfloor heating because of a bigger delta T.

Example radiators: 40–10/2=**35°C**

Example underfloor heating: 40–5/2=**37.5°C**

To compensate, you can increase the weather-dependent curve desired temperatures.

INFORMATION

The maximum leaving water temperature is decided based on setting [3.12] `Overheating setpoint`. This limit defines the maximum leaving water **in the system**. Depending on the value of this setting, the maximum LWT setpoint will also be reduced by 5°C to allow stable control towards the setpoint.

The maximum leaving water temperature **in the main zone** is decided based on setting [1.19] `Overheating water circuit`, only in case [3.13.5] `Bizone kit installed` is enabled. This limit defines the maximum leaving water **in the main zone**. Depending on the value of this setting, the maximum LWT setpoint will also be reduced by 5°C to allow stable control towards the setpoint.

Control

Defines the unit control method for the main zone.
▪ `Leaving water`: Unit operation is decided based on the leaving water temperature regardless the actual room temperature and/or heating or cooling demand of the room. ▪ `External room thermostat`: Unit operation is decided by the external thermostat or equivalent (e.g. heat pump convector). ▪ `Room thermostat`: Unit operation is decided based on the ambient temperature of the dedicated Human Comfort Interface (BRC1HHDA used as room thermostat).

In case of external room thermostat control, you must also set [1.13] `External room thermostat` (`Input source` and `Connection type`):

`Input source`:

Must match your system layout. Input source of the external room thermostat for the main zone.
▪ `Hardware` ▪ `Cloud` ▪ `Modbus`

`Connection type`:

Restriction: Only applicable if [1.13] `Input source` = `Hardware`. Must match your system layout. External room thermostat type for the main zone.
▪ `Single contact`: The used external room thermostat can only send a thermo ON/OFF condition. There is no separation between heating or cooling demand. Select this value in case of a connection to the heat pump convector (FWX*). ▪ `Dual contact`: The used external room thermostat can send a separate heating/cooling thermo ON/OFF condition. Select this value in case of connection to multi-zoning wired controls, wired room thermostats (EKRTWA) or wireless room thermostats (EKRTRB).

NOTICE

If an external room thermostat is used, the external room thermostat will control the room frost protection.

[10.10] `Main zone 2/4`

Set:

- `Heating setpoint mode`:
  - `Fixed`
  - `Weather dependent`
- `Cooling setpoint mode`:
  - `Fixed`
  - `Weather dependent`

[10.11] `Main zone 3/4 (Heating WD curve)`

Defines the weather-dependent curve used to determine the leaving water temperature of the main zone in space heating operation.

Restriction: The curve is only used when `Heating setpoint mode` (main zone) = `Weather dependent`.

See "7.2 Weather-dependent curve" [▶ 29].

[10.12] `Main zone 4/4 (Cooling WD curve)`

Defines the weather-dependent curve used to determine the leaving water temperature of the main zone in space cooling operation.

Restriction: The curve is only used when `Cooling setpoint mode` (main zone) = `Weather dependent`.

See "7.2 Weather-dependent curve" [▶ 29].

[10.13] `Additional zone 1/4`

Set:

- `Emitter type`
- `Control`

Emitter type

Must match your system layout. Emitter type of the additional zone. For more information, see " [10.9] `Main zone 1/4`" [▶ 26].
▪ `Under floor heating` ▪ `Heat pump convector` ▪ `Radiator`

Control

Shows (read-only) the unit control method for the additional zone. It is determined by the unit control method for the main zone (see " [10.9] `Main zone 1/4`" [▶ 26]).

- Leaving water if the unit control method for the main zone is Leaving water.
- External room thermostat if the unit control method for the main zone is:
  - External room thermostat, or
  - Room thermostat

In case of external room thermostat control, you must also set [2.13] External room thermostat (Input source and Connection type):

Input source:

Must match your system layout. Input source of the external room thermostat for the additional zone.
▪ Hardware ▪ Cloud ▪ Modbus

Connection type:

Restriction: Only applicable if [2.13] Input source = Hardware. Must match your system layout. External room thermostat type for the additional zone.
▪ Single contact: The used external room thermostat can only send a thermo ON/OFF condition. There is no separation between heating or cooling demand. Select this value in case of a connection to the heat pump convector (FWX*). ▪ Dual contact: The used external room thermostat can send a separate heating/cooling thermo ON/OFF condition. Select this value in case of connection to multi-zoning wired controls, wired room thermostats (EKRTWA) or wireless room thermostats (EKRTRB).

[10.14] Additional zone 2/4

Set:

- Heating setpoint mode:
  - Fixed
  - Weather dependent
- Cooling setpoint mode:
  - Fixed
  - Weather dependent

[10.15] Additional zone 3/4 (Heating WD curve)

Defines the weather-dependent curve used to determine the leaving water temperature of the additional zone in space heating operation.

Restriction: The curve is only used when Heating setpoint mode (additional zone) = Weather dependent.

See "7.2 Weather-dependent curve" [▸ 29].

[10.16] Additional zone 4/4 (Cooling WD curve)

Defines the weather-dependent curve used to determine the leaving water temperature of the additional zone in space cooling operation.

Restriction: The curve is only used when Cooling setpoint mode (additional zone) = Weather dependent.

See "7.2 Weather-dependent curve" [▸ 29].

[10.17] Configuration wizard – DHW 1/2

Set:

- Operation mode

Operation mode

Defines how the domestic hot water is prepared. The 3 different ways differ from each other by the way the desired tank temperature is set and how the unit acts upon it. See the operation manual for more details.
▪ Reheat The tank can ONLY be heated by reheat operation (fixed or scheduled[(a)]). Use the following settings: ▪ [4.11] Operation range ▪ [4.24] Enable reheat schedule[(a)] ▪ In case of fixed: [4.5] Reheat setpoint ▪ In case of scheduled: [4.25] Reheat schedule[(a)] ▪ [4.12.1] Comfort hysteresis ▪ [4.19] Reheat Trigger Threshold
▪ Schedule and reheat The tank is heated according to a schedule and between the scheduled heat up cycles, reheat operation is allowed. The settings are the same as for Reheat and for Scheduled.
▪ Scheduled The tank can ONLY be heated according to a schedule. Use the following settings: ▪ [4.11] Operation range ▪ [4.6] Single heat-up schedule

(a) Only applicable for ECH_2O units.

Related settings:

Setting	Description
[4.11] Operation range	You can set the maximum allowed tank temperature here. This is the maximum temperature that users can select for the domestic hot water. You can use this setting to limit the temperature at the hot water taps.
[4.24] Enable reheat schedule[(a)] (in case of Reheat)	The reheat setpoint for can be: ▪ Fixed (default) ▪ Scheduled You can switch between the two here: ▪ OFF = Fixed. You can now set [4.5]. ▪ ON = Scheduled. You can now set [4.25].
[4.5] Reheat setpoint (in case of fixed reheat setpoint)	You can set the fixed reheat setpoint here. ▪ 20~[4.11]°C
[4.25] Reheat schedule[(a)] (in case of scheduled reheat setpoint)	You can program the reheat schedule here.
[4.12.1] Comfort hysteresis (in case of Reheat or Schedule and reheat)	You can set the reheat hysteresis here. When the tank temperature drops below the reheat temperature minus the reheat hysteresis temperature, the tank heats up to the reheat temperature. ▪ 1~40°C
[4.19] Reheat Trigger Threshold (in case of Reheat or Schedule and reheat)	You can set the reheat trigger temperature of the domestic hot water tank to ensure sufficient energy is present in the tank here. This setting is optimised for sufficient comfort. ▪ 10~85°C **Note:** Always make sure to use a value lower than [4.5] Reheat setpoint.

Setting	Description
[4.6] `Single heat-up schedule` (in case of `Scheduled` or `Schedule and reheat`)	You can program and activate a tank schedule here.

[a] Only applicable for ECH_2O units.

INFORMATION

Risk of space heating capacity shortage for domestic hot water tank without internal booster heater: In case of frequent domestic hot water operation, frequent and long space heating/cooling interruption will happen when selecting `Operation mode = Reheat` (only reheat operation allowed for the tank).

[10.18] `Configuration wizard – DHW 2/2`

Set:

- `Tank setpoint` (select value)
- `Hysteresis` (select value)

[10.19] `Configuration wizard`

`The configuration wizard is finished!`

`Please make sure that the commissioning check list in e-Care has been completed as well.`

7.2 Weather-dependent curve

7.2.1 What is a weather-dependent curve?

Weather-dependent operation

The unit operates 'weather-dependent' if the desired leaving water temperature is determined automatically by the outdoor temperature. It therefore is connected to a temperature sensor on the North wall of the building. If the outdoor temperature drops or rises, the unit compensates instantly. Thus, the unit does not have to wait for feedback by the thermostat to increase or decrease the temperature of the leaving water. Because it reacts more quickly, it prevents high rises and drops of the indoor temperature and water temperature at tap points.

Advantage

Weather-dependent operation reduces energy consumption.

Weather-dependent curve

To be able to compensate for differences in temperature, the unit relies on its weather-dependent curve. This curve defines how much the temperature of the leaving water must be at different outdoor temperatures. Because the slope of the curve depends on local circumstances such as climate and the insulation of the building, the curve can be adjusted by an installer or user.

Type of weather-dependent curve

The type of weather-dependent curve is "2-points curve".

Availability

The weather-dependent curve is available for:

- Main zone - Heating
- Main zone - Cooling
- Additional zone - Heating
- Additional zone - Cooling

7.2.2 Using weather-dependent curves

Related screens

The following table describes:

- Where you can define the different weather-dependent curves
- When the curve is used (restriction)

To define the curve, go to…	Curve is used when…
[1.8] `Main zone` > `Heating WD curve`	[1.5] `Heating setpoint mode = Weather dependent`
[1.9] `Main zone` > `Cooling WD curve`	[1.7] `Cooling setpoint mode = Weather dependent`
[2.8] `Additional zone` > `Heating WD curve`	[2.5] `Heating setpoint mode = Weather dependent`
[2.9] `Additional zone` > `Cooling WD curve`	[2.7] `Cooling setpoint mode = Weather dependent`

INFORMATION

Maximum and minimum setpoints

You cannot configure the curve with temperatures that are higher or lower than the set maximum and minimum setpoints for that zone. When the maximum or minimum setpoint is reached, the curve flattens out.

To define a weather-dependent curve

Define the weather-dependent curve using two setpoints (**b, c**). **Example:**

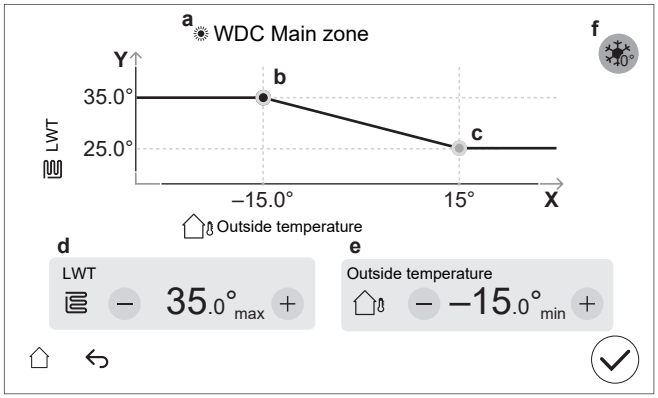

Item	Description
a	Selected weather-dependent curve: ▪ [1.8] Main zone – Heating ( ) ▪ [1.9] Main zone – Cooling ( ) ▪ [2.8] Additional zone – Heating ( ) ▪ [2.9] Additional zone – Cooling ( )
b, c	Setpoint 1 and setpoint 2. You can change them: ▪ By dragging the setpoint. ▪ By tapping the setpoint, and then using the – / + buttons in **d, e**.
d, e	Values of the selected setpoint. You can change the values using the – / + buttons.

Item	Description
f	**Restriction:** Only shown if an increase was already selected via [1.26] for main zone, or [2.20] for additional zone. `Increase around 0°C` (same as setting [1.26] for main zone, and [2.20] for additional zone). Use this setting to compensate for possible heat losses of the building due to the evaporation of melted ice or snow. (e.g. in cold region countries). In heating operation, the desired leaving water temperature is locally increased around an outdoor temperature of 0°C. 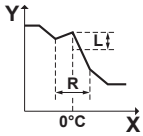 **L**: Increase; **R**: Span; **X**: Outdoor temperature; **Y**: Leaving water temperature Possible values: ▪ No ▪ `increase 2°C, span 4°C` ▪ `increase 2°C, span 8°C` ▪ `increase 4°C, span 4°C` ▪ `increase 4°C, span 8°C`
X-axis	Outdoor temperature.
Y-axis	Leaving water temperature for the selected zone. The icon corresponds to the heat emitter for that zone: ▪ : Underfloor heating ▪ : Heat pump convector ▪ : Radiator

To fine-tune a weather-dependent curve

The following table describes how to fine-tune the weather-dependent curve of a zone:

You feel…		Fine-tune with setpoints:			
At regular outdoor temperatures …	At cold outdoor temperatures …	Setpoint 1 (b)		Setpoint 2 (c)	
		X	Y	X	Y
OK	Cold	↑	↑	—	—
OK	Hot	↓	↓	—	—
Cold	OK	—	—	↑	↑
Cold	Cold	↑	↑	↑	↑
Cold	Hot	↓	↓	↑	↑
Hot	OK	—	—	↓	↓
Hot	Cold	↑	↑	↓	↓
Hot	Hot	↓	↓	↓	↓

7.3 Menu structure: Overview installer settings

NOTICE

When changing a setting, the operation is temporarily stopped. Operations will restart when you return to the home screen.

Depending on your unit type and the selected settings, some settings will not be visible.

[1] Main zone

- [1.6] `Setpoint range`
- [1.12] `Control`
- [1.13] `External room thermostat`
- [1.14] `Delta T heating`
- [1.16] `Cooling allowance`
- [1.18] `Delta T cooling`
- [1.19] `Overheating water circuit`
- [1.20] `Undercooling water circuit`
- [1.26] `Increase around 0°C`
- [1.31] `Daikin room thermostat`

[2] Additional zone

- [2.6] `Setpoint range`
- [2.12] `Control`
- [2.13] `External room thermostat`
- [2.14] `Delta T heating`
- [2.17] `Delta T cooling`
- [2.20] `Increase around 0°C`
- [2.33] `Cooling allowance`

[3] Space heating/cooling

- [3.6] `Additional zone`
- [3.7] `Max. heating overshoot LWT`
- [3.8] `Averaging time`
- [3.9] `Max. cooling undershoot LWT`
- [3.11] `Undercooling setpoint`
- [3.12] `Overheating setpoint`
- [3.13] `Bizone kit`
- [3.14] `Room thermostat present`
- [3.15] `Heatpump minimum on time`

[4] Domestic hot water

- [4.9] `Clear disinfection malfunction`
- [4.10] `Disinfection`
- [4.11] `Operation range`
- [4.13] `DHW pump`
- [4.14] `Booster heater`
- [4.18] `Disinfection enable`

[5] Settings

- [5.1] `Forced defrost`
- [5.2] `Quiet operation`
- [5.5] `Backup heater`
- [5.7] `Overview field settings`
- [5.11] `Reset fan operation hours`
- [5.14] `Bivalent settings`
- [5.18] `System restart`
- [5.22] `External ambient sensor offset`
- [5.28] `Balancing`
- [5.29] `Refrigerant recovery mode`
- [5.36] `Water pipe freeze prevention`
- [5.37] `Bivalent present`

[7] Maintenance mode

- [7.1] `Actuator test run`
- [7.2] `Air purge`
- [7.3] `Operation test run`
- [7.4] `UFH screed dryout`
- [7.7] `Operation test run settings`
- [7.8] `Malfunctioning`

[9] Energy

- [9.11] `Boiler efficiency`
- [9.12] `PE factor`
- [9.14] `Demand response`

[10] Configuration wizard

See "7.1 Configuration wizard" [▶ 24].

[11] Malfunctioning

[13] Field IO

8 Commissioning

NOTICE

Commissioning checklists. Make sure to complete the different commissioning checklists:

- In the installation manuals (outdoor unit and indoor unit) or in the installer reference guide
- In the Daikin e-Care app

NOTICE

First operation. The first time the unit starts in heating or domestic hot water operation, the unit will shortly start up in cooling operation to guarantee the reliability of the heat pump:

- For this reason, the backup heater will increase the water temperature so that the unit does not freeze up. Depending on the water volume of the system, this can take up to a few hours. It is required to start the first time in space heating or space cooling operation (not domestic hot water operation) to limit the backup heater consumption. If you would run in domestic hot water operation for the first time, the backup heater consumption would be expected to be larger.
- Error 89-10 can occur if the unit is installed during days with large temperature variations. To reduce the risk of error 89-10 occurring, it is beneficial to wait a few hours after unlocking the unit and opening the stop valve of the outdoor unit's refrigerant vessel, and before the first start-up of the unit. If error 89-10 still occurs, the unit will shortly stop operation and then resume. The unit will continue operation, but it will take more time until the unit switches from cooling to heating.

NOTICE

If the outdoor temperature is below 18°C, error 89-10 may occur when starting in cooling mode. Change the operating mode to heating, and repeat the process

NOTICE

ALWAYS operate the unit with thermistors and/or pressure sensors/switches. If NOT, burning of the compressor might be the result.

WARNING

After commissioning, do NOT turn OFF the circuit breakers (**c**) to the units so that the protection remains activated. In case of normal kWh rate power supply (**a**), there is one circuit breaker. In case of preferential kWh rate power supply (**b**), there are two.

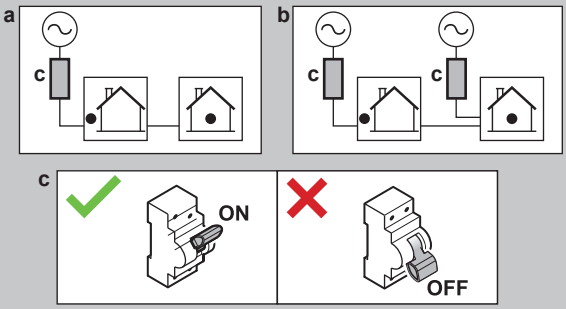

NOTICE

The pump is equipped with an anti-blockage safety routine. This means that the pump operates for a short period of time every 24 hours during long periods of inactivity to ensure it does not get stuck. To enable this function, the unit must be connected to the power supply all year round.

NOTICE

If automatic air purge valves are installed in the field piping:

- Between the outdoor unit and the indoor unit (on the entering water pipe of the indoor unit), they must be closed after commissioning.
- After the indoor unit (on the emitter side), they may remain open after commissioning.

NOTICE

For houses with a similar heat load as the declared heating capacity on the energy label, it is recommended to set the [5.6.2] `Capacity shortage setting` to 2 (`Below equilibrium`) and decrease the equilibrium setpoint [5.6.2] `Equilibrium setpoint` to the declared bivalent temperature of -10°C. (refer to product fiche in accessory bag or the online energy label database (see: https://daikintechnicaldatahub.eu/)).

NOTICE

To avoid ON/OFF behaviour of the unit it is recommended to not oversize the unit. Refer to the declared heating capacity on the energy label or the online energy label database: https://daikintechnicaldatahub.eu/.

INFORMATION

When the unit is powered ON, it will take 5 minutes for the unit to initialize. During this time the shut-off valve inlet leak stop remains closed so domestic hot water operation cannot start.

INFORMATION

Protective functions – "Maintenance mode". The software is equipped with protective functions. The unit automatically runs these functions when necessary.

Protective functions: [3.4] `Antifrost`, [5.36] `Water pipe freeze prevention` and [4.18] `Disinfection enable`.

During installation or service this behaviour is undesired. Therefore:

- **At first power-on:** The maintenance mode is active, and the protective functions are disabled by default. After 12 hours, the maintenance mode will be deactivated, and the protective functions will be enabled automatically.
- **Afterwards:** Whenever you go to [7] `Maintenance mode` the protective functions are disabled for 12 hours or until you exit `Maintenance mode`.

8.1 Checklist before commissioning

1. After the installation of the unit, check the items listed below. For the outdoor unit, also check the commissioning items in the outdoor unit installation manual.
2. Close the unit.
3. Power up the unit.

NOTICE

To prevent the pump from running in dry conditions, only power ON the unit when there is water in the unit.

☐	You read the complete installation instructions, as described in the **installer reference guide**.
☐	The **indoor unit** is properly mounted.
☐	The following **field wiring** has been carried out according to this document and the applicable legislation: ▪ Between the local supply panel and the outdoor unit ▪ Between indoor unit and outdoor unit ▪ Between the local supply panel and the indoor unit ▪ Between the indoor unit and the valves (if applicable) ▪ Between the indoor unit and the room thermostat (if applicable)
☐	The **normally closed shut-off valve** (inlet leak stop) is properly installed.
☐	The system is properly **earthed** and the earth terminals are tightened.

☐	The **fuses** or locally installed protection devices are installed according to this document, and have NOT been bypassed.
☐	The **power supply voltage** matches the voltage on the identification label of the unit.
☐	There are NO **loose connections** or damaged electrical components in the switch box.
☐	There are NO **damaged components** or **squeezed pipes** on the inside of the indoor and outdoor units.
☐	**Backup heater circuit breaker** F1B (field supply) is turned ON.
☐	The correct pipe size is installed and the **pipes** are properly insulated.
☐	There is NO **water leak** inside the indoor unit.
☐	The **shut-off valves** are properly installed and fully open.
☐	If **automatic air purge valves** are installed in the field piping: ▪ Between the outdoor unit and the indoor unit (on the entering water pipe of the indoor unit), they must be closed after commissioning. ▪ After the indoor unit (on the emitter side), they may remain open after commissioning.
☐	The following **field piping** on the cold water inlet of the DHW tank has been carried out according to this document and the applicable legislation: ▪ Non-return valve ▪ Pressure reducing valve ▪ Pressure relief valve (and it purges clean water when opened) ▪ Tundish ▪ Expansion vessel
☐	The **domestic hot water tank kit** has been installed on the cold water inlet of the DHW tank. The **pressure relief valve** (DHW circuit) purges water when opened. Clean water MUST come out.
☐	The **pressure relief valve** (space heating circuit) purges water when opened. Clean water MUST come out.
☐	The **minimum water volume** is guaranteed in all conditions. See "To check the water volume and flow rate" in "5.1 Preparing water piping" [▸ 8].
☐	The **domestic hot water tank** is filled completely.
☐	The **water quality** complies with EU directive 2020/2184.
☐	**No anti-freeze solution** (e.g. glycol) is added to the water.
☐	The **"No glycol" tag** (delivered as accessory) is attached to the field piping near the filling point.
☐	You explained to the user how to safely use the R290 heat pump. For more information about this, see the dedicated Service Manual ESIE22-02 "Systems using R290 refrigerant" (available on https://my.daikin.eu).

8.2 Checklist during commissioning

☐	To unlock the **outdoor unit** (compressor).
☐	To open the **stop valve of the outdoor unit's refrigerant vessel**.
☐	To update the **user interface software** to the latest version.
☐	To check that the **minimum flow rate** during cooling / heating start-up / defrost / backup heater operation is guaranteed in all conditions. See "To check the water volume and flow rate" in "5.1 Preparing water piping" [▸ 8].
☐	To perform an **air purge**.
☐	To perform an **actuator test run**.
☐	To perform a **test run**.
☐	To perform (start) an **underfloor screed dryout** (if necessary).

8.2.1 To unlock the outdoor unit (compressor)

NOTICE

During the locked state, the heat pump is NOT allowed to operate.

Limited operation / commissioning is possible via the electrical heaters linked to [5.23] `Emergency selection` (see " [10.7] `System` 4/4" [▸ 26]).

Who	Only trained installers with the required level of competences are authorised to perform the unlocking procedure (i.e. generate the Digital Key).
What	The compressor of Daikin Altherma 4 heat pumps is shipped in a locked state. During commissioning, it must be unlocked via the Digital Key function on the Daikin e-Care app and on the user interface of the indoor unit. 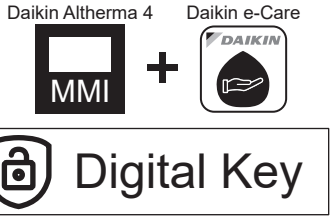 **Note:** To clear certain R290-related errors (e.g. R290 refrigerant leakage, gas sensor errors), you also need to use the Digital Key function.
When	**Option 1 (configuration wizard):** At first power ON of the unit the configuration wizard starts automatically. After you completed all steps in the wizard (see "7.1 `Configuration wizard`" [▸ 24]), the user interface will show an error message instructing to start the Digital Key function (i.e. perform the unlocking procedure). **Option 2 (errors):** When there are errors that need the Digital Key to clear, you can start the Digital Key function from the respective error messages.

Required	▪ Smartphone (iOS/Android supported) with the Daikin e-Care app installed.
	  ▪ To download the app, see "1 About this document" [▸ 2].
	  ▪ Offline functionality to generate the Digital Key is supported (if the user was already logged in).
	▪ Stand By Me professional account (to log in to the app), with the required level of training to handle R290 units.

Attention points	▪ Maximum 5 unlock attempts per 15 minutes are allowed. If exceeded, the unit does NOT allow any other attempts for 1 hour. ▪ Once the Digital Key is entered, permissions on the unit are increased for 6 hours. It is recommended for the installer to revert to user mode when leaving the site.

Unlocking procedure (flowchart)

1. e-Care app > Homepage
   Digital Key
2. Generation of the digital key (3-step process):
   1. Identification of the unit
   2. Safety questionnaire
   3. Generation of the digital key

   Result: If OK, then the compressor is unlocked, and the unit is fully functional.
3. Opening of the stop valve of the outdoor unit's refrigerant vessel
4. Confirmation of the unlocking procedure completion
5. Commissioning checklist

Unlocking procedure (detailed steps)

❶		On the homepage of the Daikin e-Care app, go to: 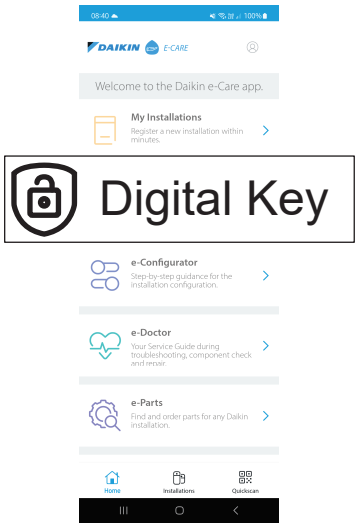 **Result:** The app verifies if the installer has the required level of competences to perform the unlocking procedure. If not, an error is shown and actions are restricted.
❷		The 3-step process to generate the Digital Key starts: ▪ 2.1 Identification of the unit ▪ 2.2 Safety questionnaire ▪ 2.3 Generation of the Digital Key
2.1		**Identification of the unit** Scan the QR code on the name plate of the indoor unit. The app will check if this unit is already registered and found by Stand By Me. For new installations, you will need to register the unit before you can go to the next step.
2.2		**Safety questionnaire** Answer safety questions. This short list of questions helps the installer verifying that the minimum safety requirements to activate the compressor are met. When the checklist is completed, the app checks the answers, and generates a report. Only if all the safety requirements are met, you can go to the next step.
2.3		**Generation of the Digital Key**
	2.3.1	The app shows a first code. Enter this code in the user interface. For example: 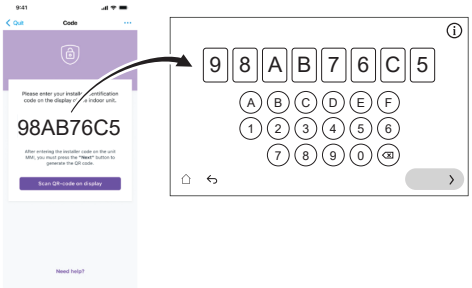
	2.3.2	The user interface generates a QR code. Scan this code with the app. For example:
	2.3.3	The app shows a second code (= Digital Key; one-time code). Enter this code in the user interface. For example: 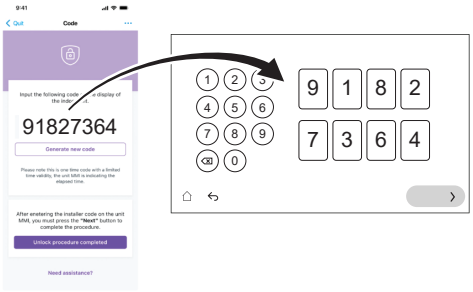
	Result:	If everything is OK, then: ▪ The user interface shows a confirmation. ▪ The compressor is unlocked and the unit is fully functional.
❸		When instructed by the user interface, open the stop valve of the outdoor unit's refrigerant vessel. See "8.2.2 To open the stop valve of the outdoor unit's refrigerant vessel" [▶ 34].
❹		On the app, confirm the completion of the unlocking procedure.

5		On the app, you will be directed to the commissioning tool where you can fill in the commissioning checklist to complete the detailed checks on the installation. When the commissioning process is completed, the unit is ready to operate.

8.2.2 To open the stop valve of the outdoor unit's refrigerant vessel

NOTICE

After installation, the stop valve must remain fully open to prevent damage to the seal.

NOTICE

When opening the stop valve of the outdoor unit's refrigerant vessel, use appropriate tools to prevent damage to the stop valve.

For safe transportation, almost all refrigerant is stored in the refrigerant vessel of the outdoor unit. During commissioning, when performing the unlocking procedure of the outdoor unit (see "8.2.1 To unlock the outdoor unit (compressor)" [▶ 32]), the stop valve of the refrigerant vessel must be fully opened (when instructed by the user interface) and remain fully open.

1 Make sure there is no gas leak on the circuit between the indoor unit and the outdoor unit by using a gas leak detector.
2 Remove the cap.
3 Turn the stop valve fully open (turn as shown until it cannot be turned any further) and leave it fully open.
4 Reattach the cap to prevent leakage.
5 Recheck to make sure there is no gas leak.

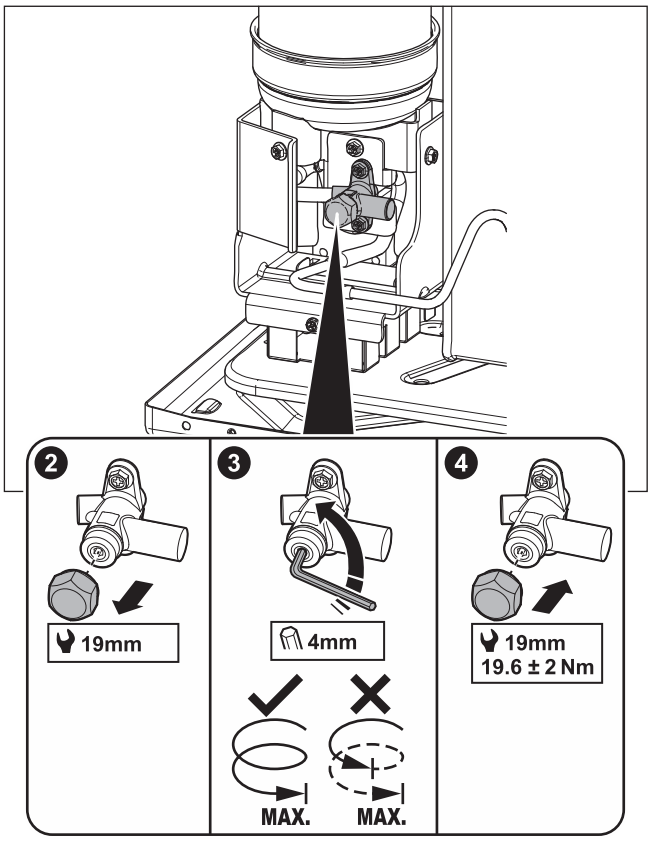

Sticker

The sticker on the service cover of the outdoor unit contains info about opening the stop valve of the outdoor unit's refrigerant vessel. Some text is in English. This is the translation:

#	English	Translation
10	Unlock the unit before opening the valve.	Unlock the unit before opening the valve.
10a	Unlock via the MMI and e-Care app. The MMI will instruct when to open the valve.	Unlock via the MMI (user interface of indoor unit) and e-Care app. The MMI will instruct when to open the valve.
10c	Turn fully open and leave fully open.	Turn fully open and leave fully open.

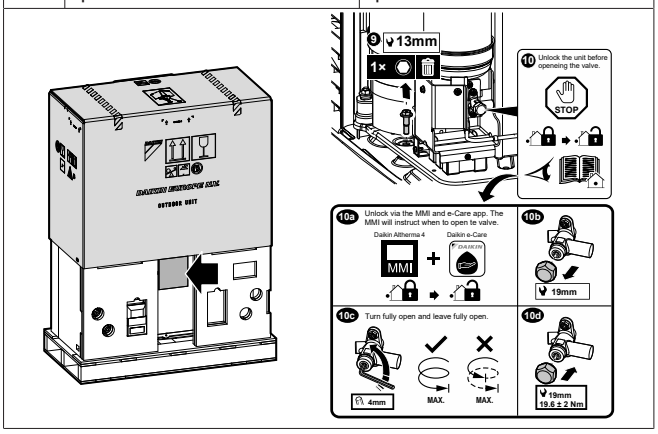

8.2.3 To update the user interface software

During commissioning, it is good practice to update the user interface software so that you have all latest functionality available.

1 Download the latest user interface software (available on https://my.daikin.eu; search via the Software Finder).
2 Put the software on a USB-stick (must be formatted as FAT32).
3 Power OFF the unit.
4 Insert the USB-stick in the USB-port located on the interface PCB (A11P).
5 Power ON the unit. Do NOT power ON the unit if the switch box is open.

Result: The software is automatically updated. You can follow its process on the user interface.

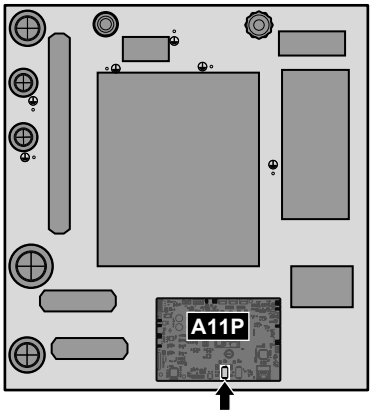

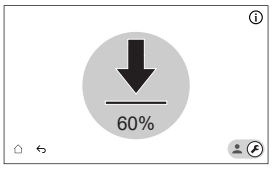

6 After the software is fully updated, perform a power reset again.

8.2.4 To check the minimum flow rate

1	Check the hydraulic configuration to find out which space heating loops can be closed by mechanical, electronic, or other valves.
2	Close all space heating loops that can be closed.

3	Start the pump test run (see "8.2.7 To perform an actuator test run" [▶ 36]). ▪ Choose [7.1.4] `Unit pump` ▪ Choose pump speed: `High`
4	Read out the flow rate[(a)] and modify the bypass valve setting to reach the minimum required flow rate + 2 l/min.

[(a)] During pump test run, the unit can operate below the minimum required flow rate.

If operation is…	Then the minimum flow rate is…
Cooling / heating start-up / defrost / backup heater operation	Required: ▪ For EPVX07: 20 l/min
Domestic hot water production	Recommended: 20 l/min.

8.2.5 To perform an air purge

NOTICE

Second air purge. If you need to perform an air purge a second time (after 30 minutes), you must leave the maintenance mode and then enter it again.

NOTICE

The main and additional pump are not switched ON during an air purge. Therefore, the air purge for the mixing kit needs to be activated via normal operation.

The pumps are switched ON:

- by activating the external thermostat for the dedicated zone, which will activate the pump for that zone, or
- in the LWT control both pumps will be ON when the space heating/cooling operation is switched on on the home screen.

1	Switch to installer mode. 5678
2	Go to [7] `Maintenance mode` and `Confirm`. 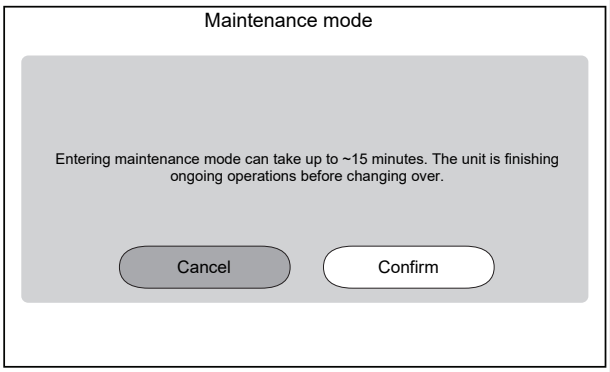 **Result:** Operation of `Space heating/cooling` and `Domestic hot water` will be automatically turned off. **Remark:** If the unit is still in entering maintenance mode after 15 minutes, perform a power reset.
3	Go to [7.2] `Maintenance mode` > `Air purge`. 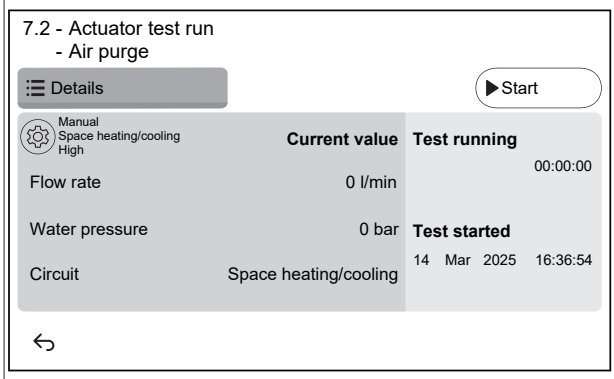

3.1	⚙
	Settings: Use the settings to specify which `Air purge` should be performed and confirm.
	 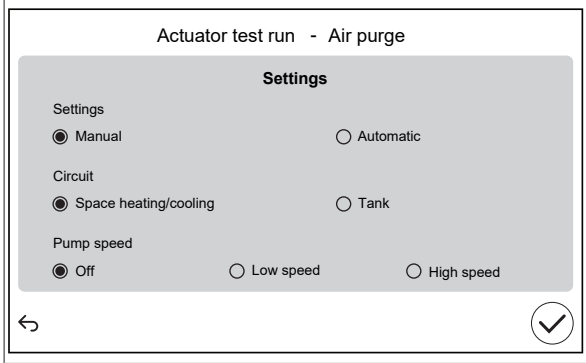
	
	`Settings`
	▪ `Manual` ▪ `Automatic`
	`Circuit:`
	▪ `Space heating/cooling` ▪ `Tank`
	`Pump speed:`
	▪ `Off` ▪ `Low speed` ▪ `High speed`

3.2	Tap `Start` to run the air purge. **Result:** The air purge starts. It stops automatically after some time.
3.3	Tap `Stop` to stop the air purge. **Result:** The air purge stops.
4	After the air purge test:
4.1	Choose ↩ to go back in the menu.
4.2	Choose ⌂ to leave the `Maintenance mode`.
5	When leaving `Maintenance mode`, the user interface automatically restores operation (`Space heating/cooling` and `Domestic hot water`) as it was before entered `Maintenance mode`. Check if all operation modes are activated as expected.

8.2.6 To perform an operation test run

NOTICE

Before starting an operation test run make sure the minimum flow requirements are guaranteed (See "8.2.4 To check the minimum flow rate" [▶ 34]).

1	Switch to installer mode. 5678

2 Go to [7] `Maintenance mode` and `Confirm`.

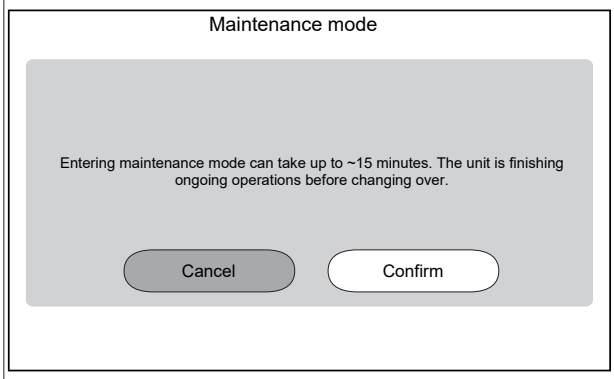

Result: Operation of `Space heating/cooling` and `Domestic hot water` will be automatically turned off.

Remark: If the unit is still in entering maintenance mode after 15 minutes, perform a power reset.

3 Go to [7.7] `Maintenance mode` > `Operation test run settings`, and define the target temperatures that you want to use during the operation test run.

✿[030]	[7.7.1] `Space heating delta T target`	Delta T target that will be used during the space heating test run. 2~20°C
✿[031]	[7.7.2] `Space heating leaving water target`	Target leaving water temperature that will be used during the space heating test run. 5~71°C
✿[032]	[7.7.3] `Space heating room`	Target room temperature that will be used during the space heating test run. 5~30°C
✿[033]	[7.7.4] `Space cooling delta T target`	Delta T target that will be used during the space cooling test run. 2~10°C
✿[034]	[7.7.5] `Space cooling leaving water target`	Target leaving water temperature that will be used during the space cooling test run. 5~30°C
✿[035]	[7.7.6] `Space cooling room`	Target room temperature that will be used during the space cooling test run. 5~30°C
✿[077]	[7.7.7] `Tank setpoint`[(a)]	Target tank temperature that will be used during the tank heat-up test run. 20~85°C
✿[145]	[7.7.9] `Tank target BSH test run`[(b)]	Target tank temperature that will be used during the booster heater test run. 25~60°C

4 Go to [7.3] `Maintenance mode` > `Operation test run`

5 Select an operation to test. **Example:** [7.3.1] `Space heating`.

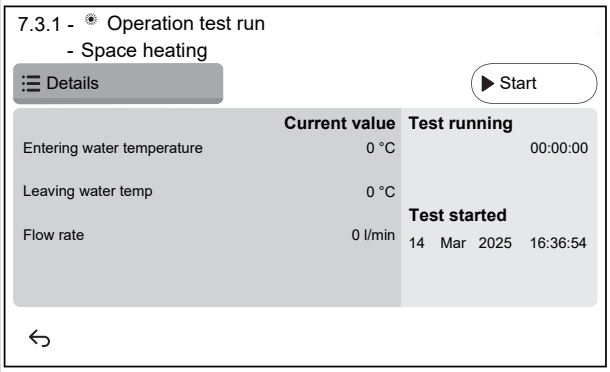

5.1 Tap `Start` to run the operation test.

Result: The operation test starts.

5.2 Tap `Stop` to stop the operation test.

Note: Even if the test run has been stopped, it can continue up to its minimum operation time set in [3.15] `Heatpump minimum on time`.

6 After the operation test run:

6.1 Choose ↩ to go back in the menu.

6.2 Choose ⌂ to leave the `Maintenance mode`.

7 When leaving `Maintenance mode`, the user interface automatically restores operation (`Space heating/cooling` and `Domestic hot water`) as it was before entered `Maintenance mode`. Check if all operation modes are activated as expected.

(a) If a tank is not connected, this setting will still appear for wall-mounted units but it will NOT be effective.

(b) If a tank is not connected, this setting will NOT appear for wall-mounted units.

8.2.7 To perform an actuator test run

1 Switch to installer mode.

2 Go to [7] `Maintenance mode` and `Confirm`.

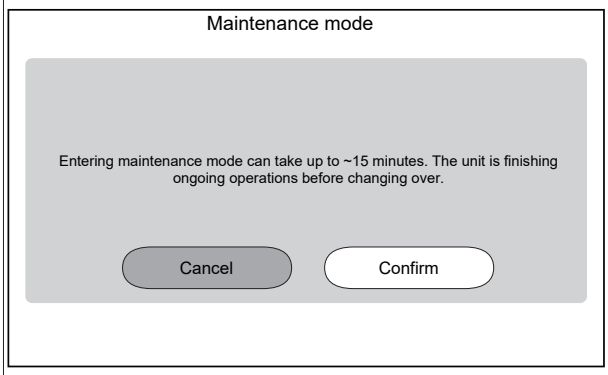

Result: Operation of `Space heating/cooling` and `Domestic hot water` will be automatically turned off.

Remark: If the unit is still in entering maintenance mode after 15 minutes, perform a power reset.

3 Go to [7.1] `Maintenance mode` > `Actuator test run`.

4	Select an actuator to test. **Example:** [7.1.4] `Unit pump` 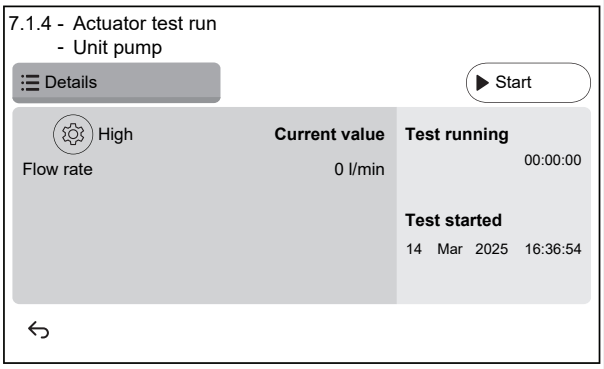
4.1	Settings: For certain actuators, you can define some settings before the test.
4.2	Tap `Start` to run the test. **Result:** ▪ Values for actuator shown in the detail section. ▪ Time measurement starts.
4.3	Tap `Stop` to stop the test. **Note:** Due to a required after run time, the test run can continue for a certain time even when it has been stopped.
5	After the actuator test:
5.1	Choose ↩ to go back in the menu.
5.2	Choose ⌂ to leave the `Maintenance mode`.
6	When leaving `Maintenance mode`, the user interface automatically restores operation (`Space heating/cooling` and `Domestic hot water`) as it was before entered `Maintenance mode`. Check if all operation modes are activated as expected.

Possible actuator test runs

Depending on your unit type and selected settings, some tests will not be visible.

INFORMATION°

During the actuator tests for `Booster heater`, `Bivalent` and `Tank boiler` the setpoint is not respected. The component will be stopped when reaching its internal limits. If these limits are reached the actuator test will continue and activate that component again when the limitations allow its operation.

- [7.1.2] `Bivalent` test
- [7.1.3] `Tank boiler` test
- [7.1.4] `Unit pump` test

INFORMATION

Make sure that all air is purged before executing the test run. Also avoid disturbances in the water circuit during the test run.

- [7.1.5] `Diverter valve` test (3-way valve for switching between space heating and tank heating)
- [7.1.6] `Backup heater` test
- [7.1.7] `Tank valve` test
- [7.1.8] `Bypass valve` test

Bizone mixing kit actuator tests

INFORMATION

This functionality is NOT available in early versions of the user interface software.

- [7.1.9] `Bizone kit mixing valve` test
- [7.1.10] `Bizone kit direct pump` test
- [7.1.11] `Bizone kit mixed pump` test

To execute an actuator test on the Bizone mixing kit go to home screen and turn on operation of `Space heating/cooling` and adapt the setpoint of the main zone. Then visual check if the pumps are working and the mixing valve are turning.

8.2.8 To perform an underfloor heating screed dryout

NOTICE

The installer is responsible for:

- contacting the screed manufacturer for the maximum allowed water temperature, to avoid cracking the screed,
- programming the underfloor heating screed dryout schedule according to the initial heating instructions of the screed manufacturer,
- checking the proper functioning of the setup on a regular basis,
- performing the correct program complying with the type of the used screed.

NOTICE

Before starting an underfloor heating screed dryout make sure the minimum flow requirements are guaranteed (See "8.2.4 To check the minimum flow rate" [▶ 34]).

NOTICE

When two zones are selected the underfloor heating screed dryout can only be executed on the main zone.

NOTICE

When there is a power failure, the underfloor heating screed dryout will continue where it was interrupted in the underfloor heating screed dryout program.

INFORMATION

The procedure below indicates that you need to tap `Stop` to stop the function, but the `Stop` button is NOT available in early versions of the user interface software. Instead, use ↩ or ⌂ to stop the function.

1	Switch to installer mode.
2	Go to [7] `Maintenance mode` and `Confirm` . 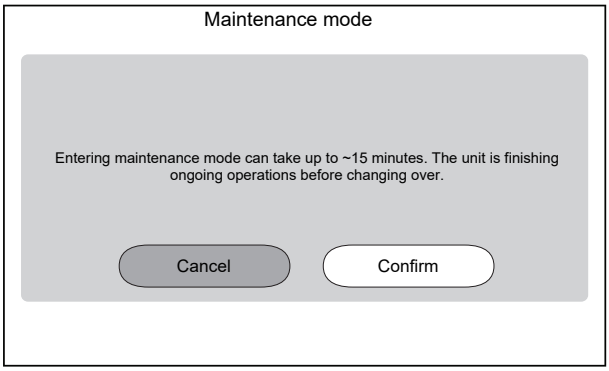 **Result:** Operation of `Space heating/cooling` and `Domestic hot water` will be automatically turned off. **Remark:** If the unit is still in entering maintenance mode after 15 minutes, perform a power reset.

3	Go to [7.4] `Maintenance mode` > `UFH screed dryout` 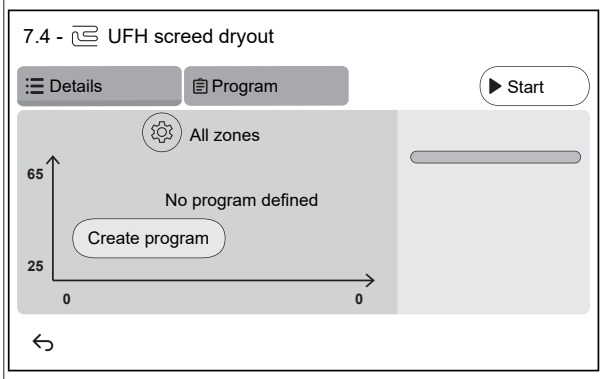
3.1	Tap on `Create program` or tap on `Program` and + to define a program step. A program can consists of multiple program-steps and a maximum of 30 program-steps. 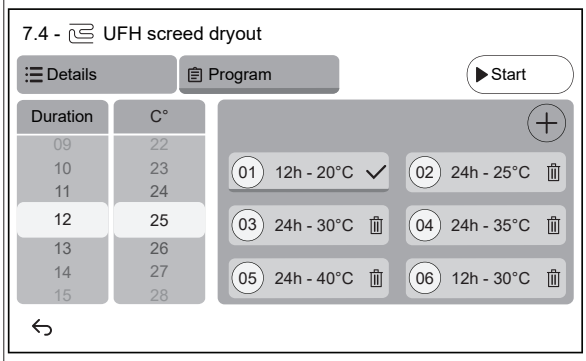 Each program step contains the sequence number, the duration and desired leaving water temperature.
3.2	⚙ Settings: **Note:** This functionality is NOT available in early versions of the user interface software. Underfloor heating screed dryout can only be executed on the main zone.
3.3	Tap `Start` to run the underfloor heating screed dryout. 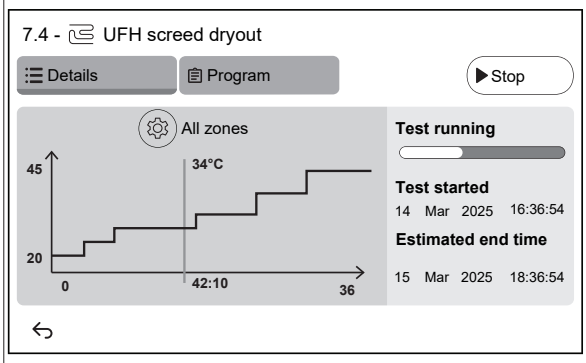 **Result:** ▪ The underfloor heating screed dryout starts. It stops automatically when all steps are done. ▪ A progress bar indicates where the program is currently situated. ▪ The program start time and estimated end time based on the current time and duration of the program are displayed ▪ The underfloor heating screen is used as home screen until the finish of the program.
3.4	Tap `Stop` to stop the underfloor heating screed dryout.
4	After the underfloor heating screed dryout:
4.1	Choose ↩ to go back in the menu.
4.2	Choose ⌂ to leave the `Maintenance mode`

5	When leaving `Maintenance mode`, the user interface automatically restores operation (`Space heating/cooling` and `Domestic hot water`) as it was before entered `Maintenance mode`. Check if all operation modes are activated as expected.

9 Hand-over to the user

Once the test run is finished and the unit operates properly, make sure the following is clear for the user:

- Fill in the installer setting table (in the operation manual) with the actual settings.
- Make sure that the user has the printed documentation and ask him/her to keep it for future reference. Inform the user that he/she can find the complete documentation at the URL mentioned earlier in this manual.
- Explain to the user how to properly operate the system and what to do in case of problems.
- Show the user what to do for the maintenance of the unit.
- Explain about energy saving tips to the user as described in the operation manual.
- Explain to the user to NOT turn OFF the circuit breakers (**c**) to the units so that the protection remains activated. In case of normal kWh rate power supply (**a**), there is one circuit breaker. In case of preferential kWh rate power supply (**b**), there are two.

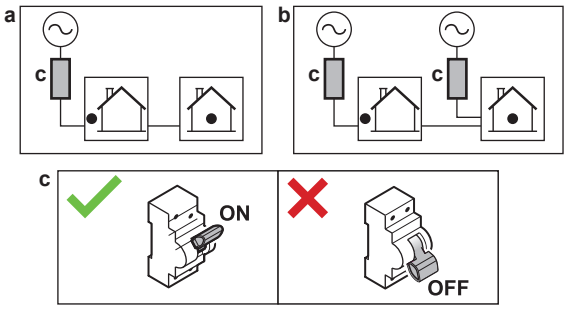

- Explain to the user that when they want to dispose of the unit, that they cannot do it themselves, but that they need to contact a Daikin certified technician.
- Explain to the user how to safely use the R290 heat pump. For more information about this, see the dedicated Service Manual ESIE22-02 "Systems using R290 refrigerant" (available on https://my.daikin.eu).

10 Maintenance and service

NOTICE

General maintenance/inspection checklist. Next to the maintenance instructions in this chapter, a general maintenance/inspection checklist is also available on the Daikin Business Portal (authentication required).

The general maintenance/inspection checklist is complementary to the instructions in this chapter and can be used as a guideline and reporting template during maintenance.

NOTICE

Maintenance MUST be done by an authorised installer or service agent.

We recommend performing maintenance at least once a year. However, applicable legislation might require shorter maintenance intervals.

10.1 Overview: Maintenance and service

This chapter contains information about:

- The yearly maintenance of the indoor unit
- Draining the domestic hot water tank
- Inspecting the inside of the domestic hot water tank
- Cleaning the water filter in case of trouble

10.2 Maintenance safety precautions

DANGER: RISK OF ELECTROCUTION

DANGER: RISK OF BURNING/SCALDING

NOTICE: Risk of electrostatic discharge

Before performing any maintenance or service work, touch a metal part of the unit in order to eliminate static electricity and to protect the PCB.

10.3 Checklist for yearly maintenance of the indoor unit

Check the following at least once a year:

- Water pressure
- Magnetic filter/dirt separator
- Water pressure relief valve
- Relief valve hose
- Pressure relief valve of the domestic hot water tank
- Switch box
- Descaling
- Chemical disinfection

Water pressure

Keep water pressure above 1 bar. If it is lower, add water.

Magnetic filter/dirt separator

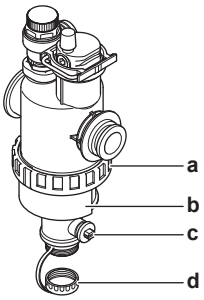

a Screw connection
b Magnetic sleeve
c Drain valve
d Drain cap

The yearly maintenance of the magnetic filter/dirt separator consists of:

- Checking if both parts of the magnetic filter/dirt separator are still screwed tight (a).
- Emptying the dirt separator as follows:

1. Take off the magnetic sleeve (b).
2. Unscrew the drain cap (d).
3. Connect a drain hose to the bottom of the water filter so that the water and dirt can be collected in a suitable container (bottle, sink...).
4. Open the drain valve for a couple of seconds (c).

   Result: Water and dirt will come out.
5. Close the drain valve.
6. Screw the drain cap back on.
7. Reattach the magnetic sleeve.
8. Check the pressure of the water circuit. If required, add water.

NOTICE

- When checking the magnetic filter/dirt separator for tightness, hold it firmly, so as NOT to apply stress to the water piping.
- Do NOT isolate the magnetic filter/dirt separator by closing the shut-off valves. To properly empty the dirt separator, sufficient pressure is required.
- To prevent dirt from remaining in the dirt separator, ALWAYS take off the magnetic sleeve.
- ALWAYS first unscrew the drain cap, and connect a drain hose to the bottom of the water filter, then open the drain valve.

INFORMATION

For yearly maintenance, you do not have to remove the water filter from the unit to clean it. But in case of trouble with the water filter, you might have to remove it so that you can thoroughly clean it. Then you need to do as follows:

- "10.6.1 To remove the water filter" [▶ 41]
- "10.6.2 To clean the water filter in case of trouble" [▶ 41]
- "10.6.3 To install the water filter" [▶ 42]

Water pressure relief valve

Open the valve and check if it operates correctly. **The water may be very hot!**

Checkpoints are:

- The water flow coming from the relief valve is high enough, no blockage of the valve or in between piping is suspected.
- Dirty water coming out of the relief valve:
  - open the valve until the discharged water does NOT contain dirt anymore
  - flush the system

It is recommended to do this maintenance more frequently.

Pressure relief valve hose

Check whether the pressure relief valve hose is positioned appropriately to drain the water. See "4.3.2 To connect the drain hose to the drain" [▶ 7].

Pressure relief valve of the domestic hot water tank (field supply)

Open the valve.

CAUTION

Water coming out of the valve may be very hot.

- Check if nothing blocks the water in the valve or in between piping. The water flow coming from the relief valve must be high enough.
- Check if the water coming out of the relief valve is clean. If it contains debris or dirt:
  - Open the valve until the discharged water does not contain debris or dirt anymore.
  - Flush and clean the complete tank, including the piping between the relief valve and cold water inlet.

To make sure this water originates from the tank, check after a tank heat up cycle.

INFORMATION

It is recommended to perform this maintenance more than once a year.

Switch box

- Carry out a thorough visual inspection of the switch box and look for obvious defects such as loose connections or defective wiring.
- Using an ohmmeter, check if contactor K3M (depending on your installation) operate correctly. The contact of contactor K3M must be in open position when the power is turned OFF.

WARNING

If the internal wiring is damaged, it has to be replaced by the manufacturer, its service agent or similarly qualified persons.

Descaling

Depending on water quality and set temperature, scale can deposit on the heat exchanger inside the domestic hot water tank and can restrict heat transfer. For this reason, descaling of the heat exchanger may be required at certain intervals.

Chemical disinfection

If the applicable legislation requires a chemical disinfection in specific situations, involving the domestic hot water tank, please be aware that the domestic hot water tank is a stainless steel cylinder. We recommend to use a non-chloride based disinfectant approved for use with water intended for human consumption.

NOTICE

When using means for descaling or chemical disinfection, make sure water quality still complies with EU directive 2020/2184.

10.4 To drain the domestic hot water tank

DANGER: RISK OF BURNING/SCALDING

The water in the tank can be very hot.

Prerequisite: Stop the unit operation via the user interface.

Prerequisite: Turn OFF the respective circuit breaker.

Prerequisite: Close the cold water supply.

Prerequisite: Open all the hot water tapping points to allow air to enter the system.

1 Remove the top panel. See "4.2.1 To open the indoor unit" [▶ 6].

2 Remove the user interface panel. See "4.2.1 To open the indoor unit" [▶ 6].

3 Lower the switchbox. See "4.2.1 To open the indoor unit" [▶ 6].

4 Remove the tube from the temperature and pressure relief valve that is located on top of the tank.

5 Remove the temperature and pressure relief valve from the tank.

6 Use a drain hose and a pump to drain the tank via the access point.

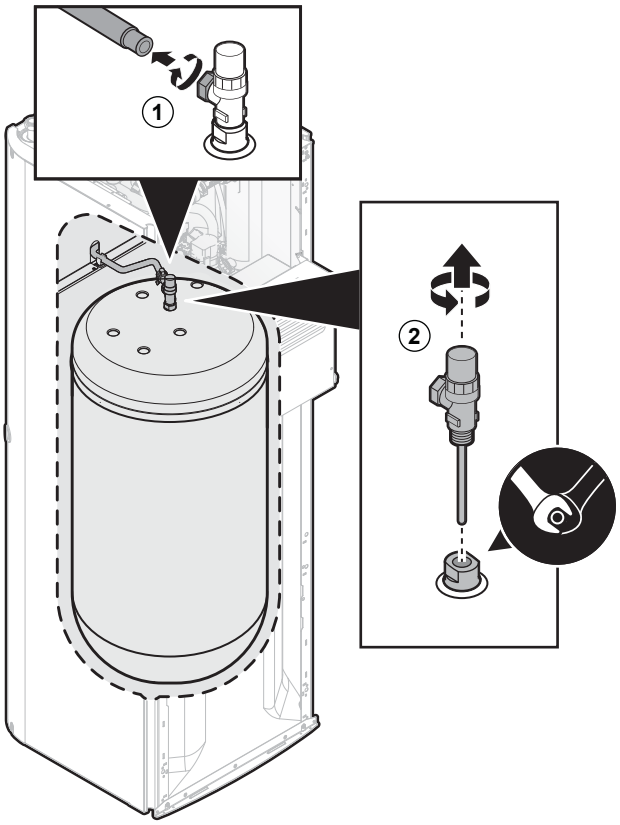

7 Tightening torques for installation:

Item	Tightening torque
Tube connection	30 N•m
Temperature and pressure relief valve	40 N•m

10.5 To inspect the inside of the domestic hot water tank

DANGER: RISK OF BURNING/SCALDING

The water in the tank can be very hot.

Prerequisite: Stop the unit operation via the user interface.

Prerequisite: Turn OFF the respective circuit breaker.

Prerequisite: Close the cold water supply.

Prerequisite: Open all the hot water tapping points to allow air to enter the system.

Prerequisite: Remove the top panel. See "4.2.1 To open the indoor unit" [▶ 6].

1 Remove the clip that fixes the domestic hot water OUT pipe.

2 Disconnect the pipe such that the tank is accessible for visual inspection (e.g. with an endoscope).

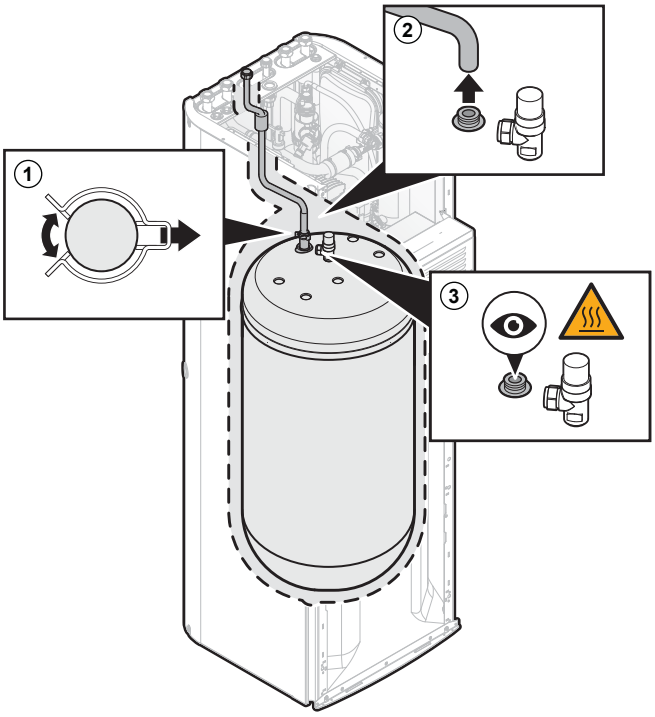

3 Reconnect the pipe to the tank.

4 Reinstall the clip to fix the domestic hot water OUT pipe.

10.6 About cleaning the water filter in case of trouble

INFORMATION

For yearly maintenance, you do not have to remove the water filter from the unit to clean it. But in case of trouble with the water filter, you might have to remove it so that you can thoroughly clean it. Then you need to do as follows:

- "10.6.1 To remove the water filter" [▸41]
- "10.6.2 To clean the water filter in case of trouble" [▸41]
- "10.6.3 To install the water filter" [▸42]

10.6.1 To remove the water filter

Prerequisite: Stop the unit operation via the user interface.

Prerequisite: Turn OFF the respective circuit breaker.

1 The water filter is located behind the switch box. To get access to it, see "4.2.1 To open the indoor unit" [▸6].

2 Close the stop valves of the water circuit.

3 Close the valve (if equipped) of the water circuit towards the expansion vessel.

4 Remove the cap on the bottom of the magnetic filter/dirt separator.

5 Connect a drain hose to the bottom of the water filter.

6 Open the valve on the bottom of the water filter to drain water from the water circuit. Collect the drained water in a bottle, sink,… using the installed drain hose.

7 Remove the 2 clips that fix the water filter.

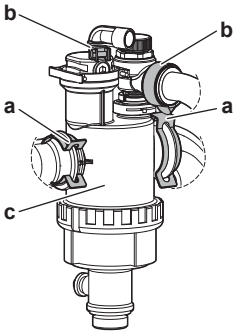

a Clip
b Ring clamp
c Magnetic filter/dirt separator

8 Unscrew the 2 ring clamps and remove the 2 hoses to the gas separator box.

9 Remove the water filter.

10 Remove the drain hose from the water filter.

NOTICE

Although the water circuit is drained, some water may be spilled when removing the magnetic filter/dirt separator from the filter housing. ALWAYS clean up spilled water.

10.6.2 To clean the water filter in case of trouble

1 Remove the water filter from the unit. See "10.6.1 To remove the water filter" [▸41].

NOTICE

To protect the piping connected to the magnetic filter/dirt separator from damage it is recommended to perform this procedure with the magnetic filter/dirt separator removed from the unit.

2 Unscrew the bottom of the water filter housing. Use an appropriate tool if needed.

NOTICE

Opening the magnetic filter/dirt separator is ONLY required in case of severe issues. Preferably this action is never to be done during the complete lifetime of the magnetic filter/dirt separator.

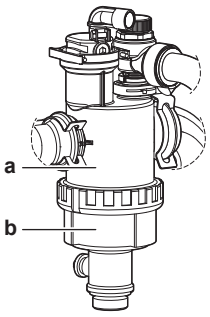

a Bottom part to be unscrewed
b Water filter housing

3 Remove the strainer and the rolled-up filter from the water filter housing and clean with water.

4 Install the cleaned rolled-up filter and strainer in the water filter housing.

INFORMATION

Correctly install the strainer in the magnetic filter/dirt separator housing using the protrusions.

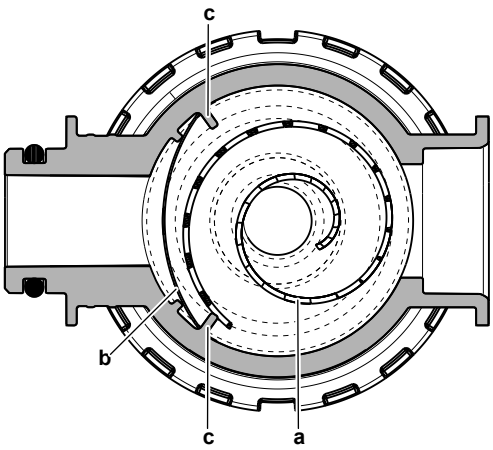

a Rolled-up filter
b Strainer
c Protrusion

5 Install and properly tighten the bottom of the water filter housing.

10.6.3 To install the water filter

NOTICE

Check the condition of the O-rings and replace if needed. Apply water or silicon grease to the O-rings before installation.

1 Re-connect the 2 hoses and screw on the 2 ring clamps. As the hoses to the gas separator are flexible, it is easier to screw on the ring clamps before the water filter is in its final position.

2 Install the water filter in the correct location.

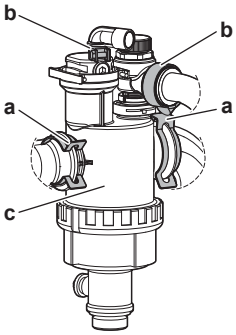

a Clip
b Ring clamp
c Magnetic filter/dirt separator

3 Install the 2 clips to fix the water filter to the water circuit pipes.

4 Open the valve (if equipped) of the water circuit towards the expansion vessel.

CAUTION

Make sure to open the valve (if equipped) towards the expansion vessel, otherwise the overpressure will be generated.

5 Open the stop valves and add water to the water circuit if needed.

11 Technical data

A **subset** of the latest technical data is available on the regional Daikin website (publicly accessible). The **full set** of the latest technical data is available on the Daikin Business Portal (authentication required).

11.1 Piping diagram: Indoor unit

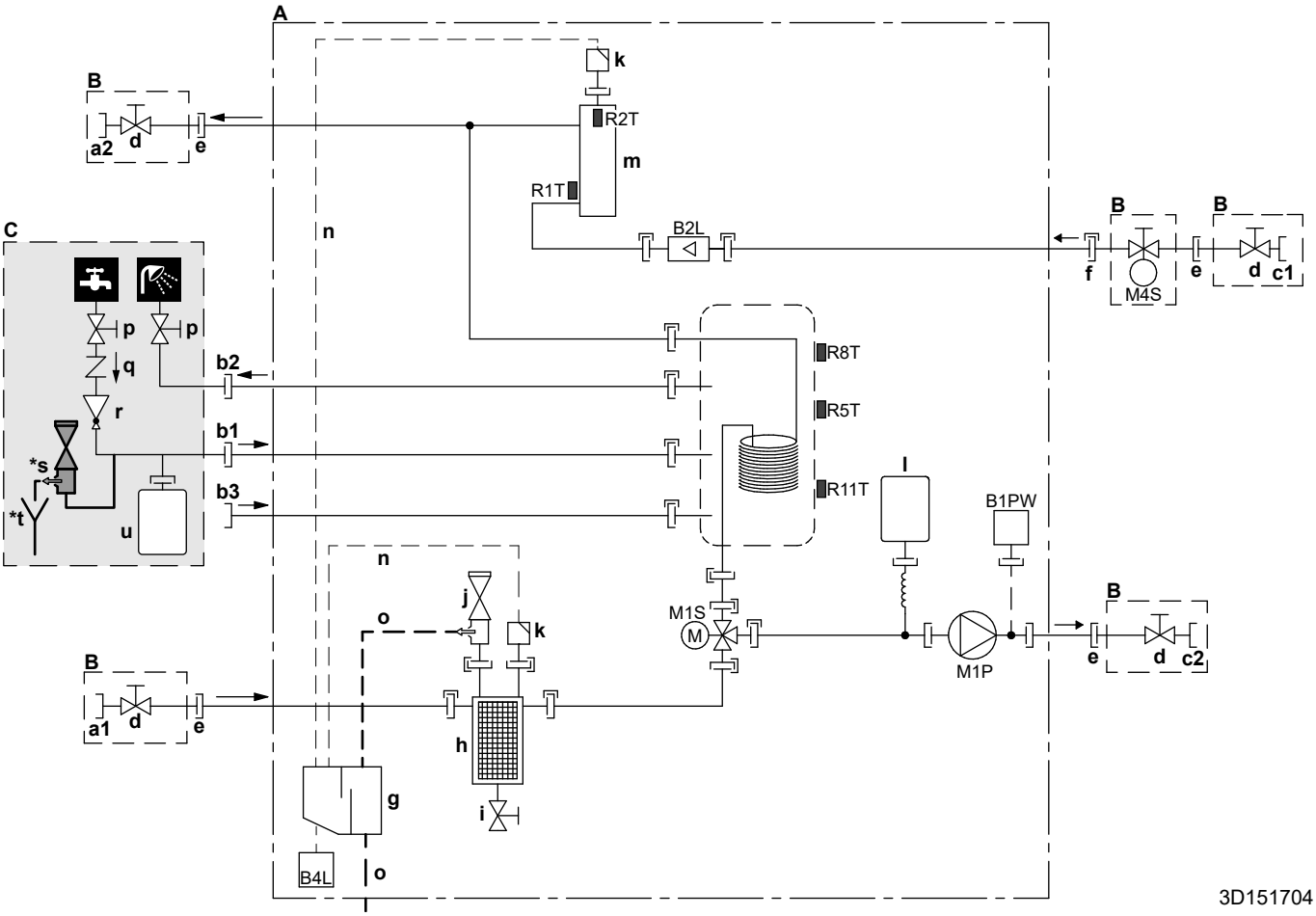

A	Indoor unit
B	Field installed (delivered as accessory)
C	Field supplied
a1	Space heating/cooling – Water IN (screw connection, female, 1")
a2	Space heating/cooling – Water OUT (screw connection, female, 1")
b1	DHW – Cold water IN (screw connection, 3/4")
b2	DHW – Hot water OUT (screw connection, 3/4")
b3	Recirculation connection (female, 3/4")
c1	Water IN from outdoor unit (screw connection, female, 1")
c2	Water OUT to outdoor unit (screw connection, female, 1")
d	Shut-off valve (male 1" – female 1")
e	Screw connection, 1"
f	Quick coupling
g	Gas separator
h	Magnetic filter/dirt separator
i	Drain valve
j	Safety valve
k	Air purge
l	Expansion vessel
m	Backup heater
n	Hose for air purge
o	Drain hose for water
p	Shut-off valve (recommended)
q	Non-return valve (recommended)
r	Pressure reducing valve (recommended)
***s**	Pressure relief valve (max. 10 bar (=1.0 MPa))(mandatory)
***t**	Tundish (mandatory)
u	Expansion vessel (recommended)
B1PW	Space heating water pressure sensor
B2L	Flow sensor
B4L	Gas sensor
M1P	Pump
M1S	3-way valve (space heating/domestic hot water)
M4S	Normally closed shut-off valve (inlet leak stop)(quick coupling – female 1")

Thermistors:

R1T	Inlet water
R2T	Backup heater – Water OUT
R5T, R8T, R11T	Tank

Connections:

- Screw connection
- Flare connection
- Quick coupling
- Brazed connection

11.2 Wiring diagram: Indoor unit

See the internal wiring diagram supplied with the unit (on the inside of the indoor unit switch box cover). The abbreviations used are listed below. There are checkboxes for each `Field IO` connection on the internal wiring diagram. It is recommended to mark the checkbox for the selected standard option after wiring.

Checkboxes internal wiring diagram: Example

This example shows how to mark a checkbox on the internal wiring diagram.

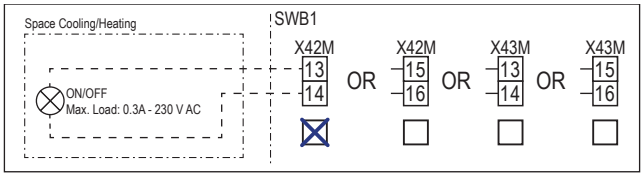

Notes to go through before starting the unit

English	Translation
Notes to go through before starting the unit	Notes to go through before starting the unit
X2M	Main terminal – Outdoor unit
X40M	Main terminal – Indoor unit
X41M	Main terminal – Backup heater
X42M	Field wiring for high voltage
X44M, X45M	Field wiring for SELV (Safety Extra Low Voltage)
—·—·—·—	Earth wiring
– – – – – – –	Field supply
①	Several wiring possibilities
	Option
	Not mounted in switch box
	Wiring depending on model
	PCB
Note 1: Connection point of the power supply for the BUH should be foreseen outside the unit.	Note 1: Connection point of the power supply for the backup heater should be foreseen outside the unit.
Backup heater power supply	Backup heater power supply
☐ 4.5 kW (1N~, 230 V)	☐ 4.5 kW (1N~, 230 V)
☐ 4.5 kW (3N~, 400 V)	☐ 4.5 kW (3N~, 400 V)
☐ 4.5 kW (3~, 230 V)	☐ 4.5 kW (3~, 230 V)
☐ 4.5 kW (2~, 230 V)	☐ 4.5 kW (2~, 230 V)
☐ 6 kW (1N~, 230 V)	☐ 6 kW (1N~, 230 V)
☐ 9 kW (3N~, 400 V)	☐ 9 kW (3N~, 400 V)
User installed options	User installed options
☐ Remote user interface	☐ Dedicated Human Comfort Interface (BRC1HHDA used as room thermostat)
☐ Ext. indoor thermistor	☐ External indoor thermistor
☐ Ext outdoor thermistor	☐ External outdoor thermistor
☐ Safety thermostat	☐ Safety thermostat

English	Translation
☐ Smart Grid	☐ Smart Grid
☐ WLAN cartridge	☐ WLAN cartridge
☐ Bizone mixing kit	☐ Bizone mixing kit
Main LWT	Main leaving water temperature
☐ On/OFF thermostat (wired)	☐ ON/OFF thermostat (wired)
☐ On/OFF thermostat (wireless)	☐ ON/OFF thermostat (wireless)
☐ Ext. thermistor	☐ External thermistor
☐ Heat pump convector	☐ Heat pump convector
Add LWT	Additional leaving water temperature
☐ On/OFF thermostat (wired)	☐ ON/OFF thermostat (wired)
☐ On/OFF thermostat (wireless)	☐ ON/OFF thermostat (wireless)
☐ Ext. thermistor	☐ External thermistor
☐ Heat pump convector	☐ Heat pump convector

Position in switch box

English	Translation
Position in switch box	Position in switch box

Legend

A1P		Hydro PCB
A2P	*	ON/OFF thermostat (PC=power circuit)
A3P	*	Heat pump convector
A5P		Power supply PCB
A6P		Multistep backup heater PCB
A11P		Interface PCB
A12P		User interface PCB
A14P	*	PCB of the dedicated Human Comfort Interface (BRC1HHDA used as room thermostat)
A15P	*	Receiver PCB (wireless ON/OFF thermostat)
A30P	*	Bizone mixing kit PCB
F1B	#	Overcurrent fuse - Backup heater
F2B	#	Overcurrent fuse - Main
K1A, K2A	*	High voltage Smart Grid relay
M2P	#	Domestic hot water pump
M2S	#	2-way valve for cooling mode
M4S		Normally closed shut-off valve (inlet leak stop)
P* (A14P)	*	Terminal
PC (A15P)	*	Power circuit
Q*DI	#	Earth leakage circuit breaker
Q1L		Thermal protector backup heater

Q4L	#	Safety thermostat
R1H (A2P)	*	Humidity sensor
R1T (A2P)	*	Ambient sensor ON/OFF thermostat
R1T (A14P)	*	Ambient sensor user interface
R1T (A15P)	*	Ambient sensor user interface
R2T (A2P)	*	External sensor (floor or ambient)
R6T	*	External indoor or outdoor ambient thermistor
S1S	#	Preferential kWh rate power supply contact
S2S	#	Electricity meter pulse input 1
S3S	#	Electricity meter pulse input 2
S4S	#	Smart Grid feed-in (Smart Grid photovoltaic power pulse meter)
S10S-S11S	#	Low voltage Smart Grid contact
ST6 (A30P)	*	Connector
X*A, X*Y, X*Y*		Connector
X*M		Terminal strip

* Optional
\# Field supply

Translation of text on wiring diagram

English	Translation
(1) Main power connection	(1) Main power connection
2-pole fuse	2-pole fuse
Indoor unit supplied from outdoor	Indoor unit supplied from outdoor
Indoor unit supplied separately	Indoor unit supplied separately
Normal kWh rate power supply	Normal kWh rate power supply
Outdoor unit	Outdoor unit
Standard	Standard
SWB	Switch box
(2) Backup heater power supply	(2) Backup heater power supply
2-pole fuse	2-pole fuse
4-pole fuse	4-pole fuse
For these connections use the optional adapter wire harnesses.	For these connections use the optional adapter wire harnesses.
Only for 4.5 kW MBUH units	Only for 4.5 kW multistep backup heater units
Only for 9 kW MBUH units	Only for 9 kW multistep backup heater units
(3) User interface	(3) User interface
3rd generation WLAN cartridge	Third generation WLAN cartridge
OR	OR
Remote user interface	Dedicated Human Comfort Interface (BRC1HHDA used as room thermostat)
SD card	Card slot for WLAN cartridge
Voltage	Voltage
(4) Shut-off valve - Inlet leak stop	(4) Normally closed shut-off valve (inlet leak stop)
(5) Ext. thermistor	(5) External thermistor
External ambient sensor option (indoor or outdoor)	External ambient sensor option (indoor or outdoor)
Voltage	Voltage
(6) Field supplied options	(6) Field supplied options
230 V AC Control Device	230 V AC Control Device
Alarm output	Alarm output
Bizone mixing kit	Bizone mixing kit
Contact rating	Contact rating

English	Translation
Continuous	Continuous current
DHW pump output	Domestic hot water pump output
DHW pump	Domestic hot water pump
Electric pulse meter input	Electricity meter
Ext. heat source	External heat source
For HV Smart Grid	For high voltage Smart Grid
For LV Smart Grid	For low voltage Smart Grid
Inrush	Inrush current
Max. load	Maximum load
ON/OFF output	ON/OFF output
Preferential kWh rate power supply contact	Preferential kWh rate power supply contact
Safety thermostat contact	Safety thermostat contact
Shut-off valve NC	Shut-off valve – Normally closed
Shut-off valve NO	Shut-off valve – Normally open
Smart Grid PV power pulse meter	Smart Grid photovoltaic power pulse meter
Space cooling/heating	Space cooling/heating
Voltage	Voltage
(7) External On/OFF thermostats and heat pump convector	(7) External ON/OFF thermostats and heat pump convector
Additional LWT zone	Additional leaving water temperature zone
For external sensor (floor or ambient)	For external sensor (floor or ambient)
For heat pump convector	For heat pump convector
For wired On/OFF thermostat	For wired ON/OFF thermostat
For wireless On/OFF thermostat	For wireless ON/OFF thermostat
Main LWT zone	Main leaving water temperature zone
Max. load	Maximum load

Electrical connection diagram

Note: In case of signal cable: keep minimum distance to power cables >5 cm

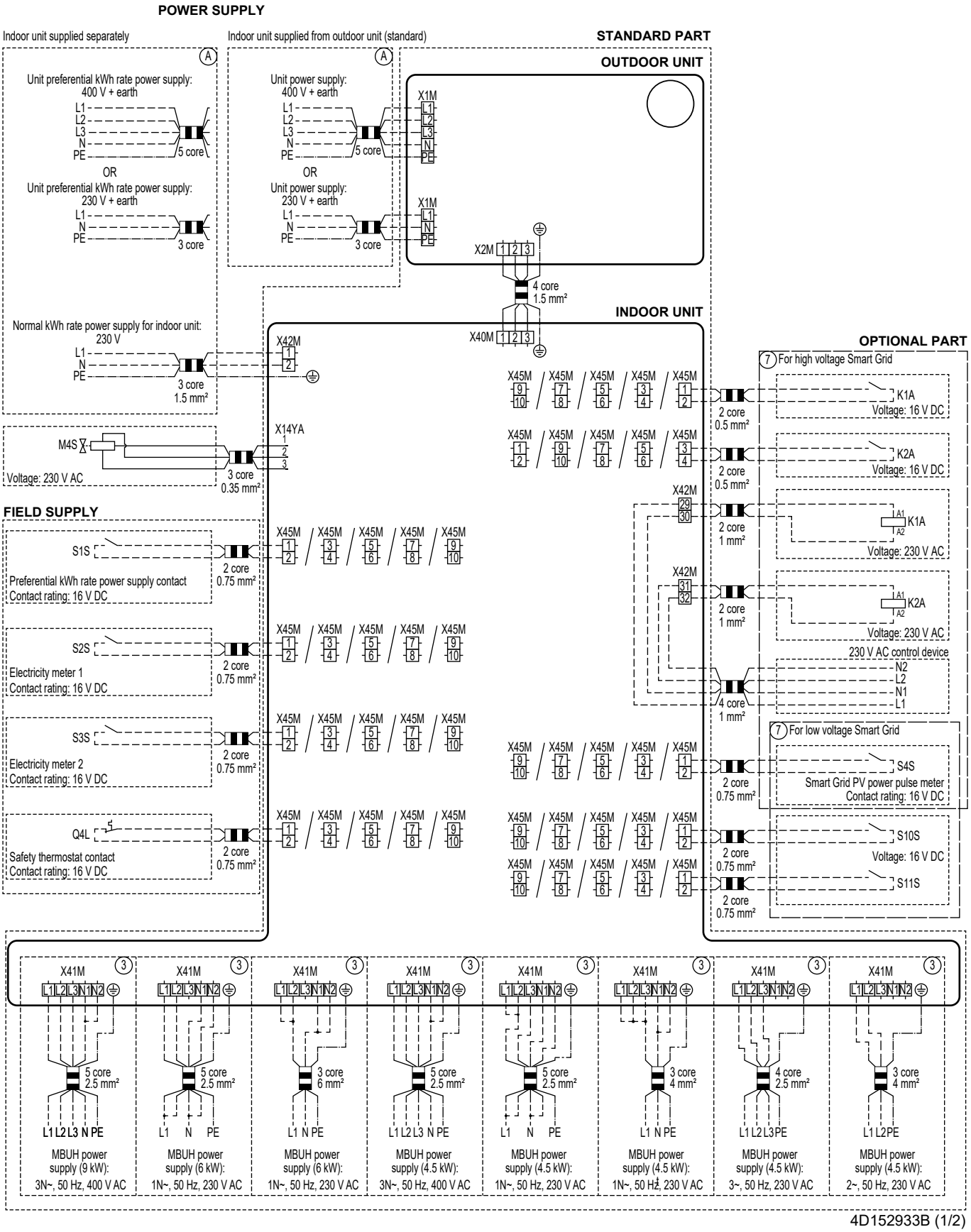

4D152933B (1/2)

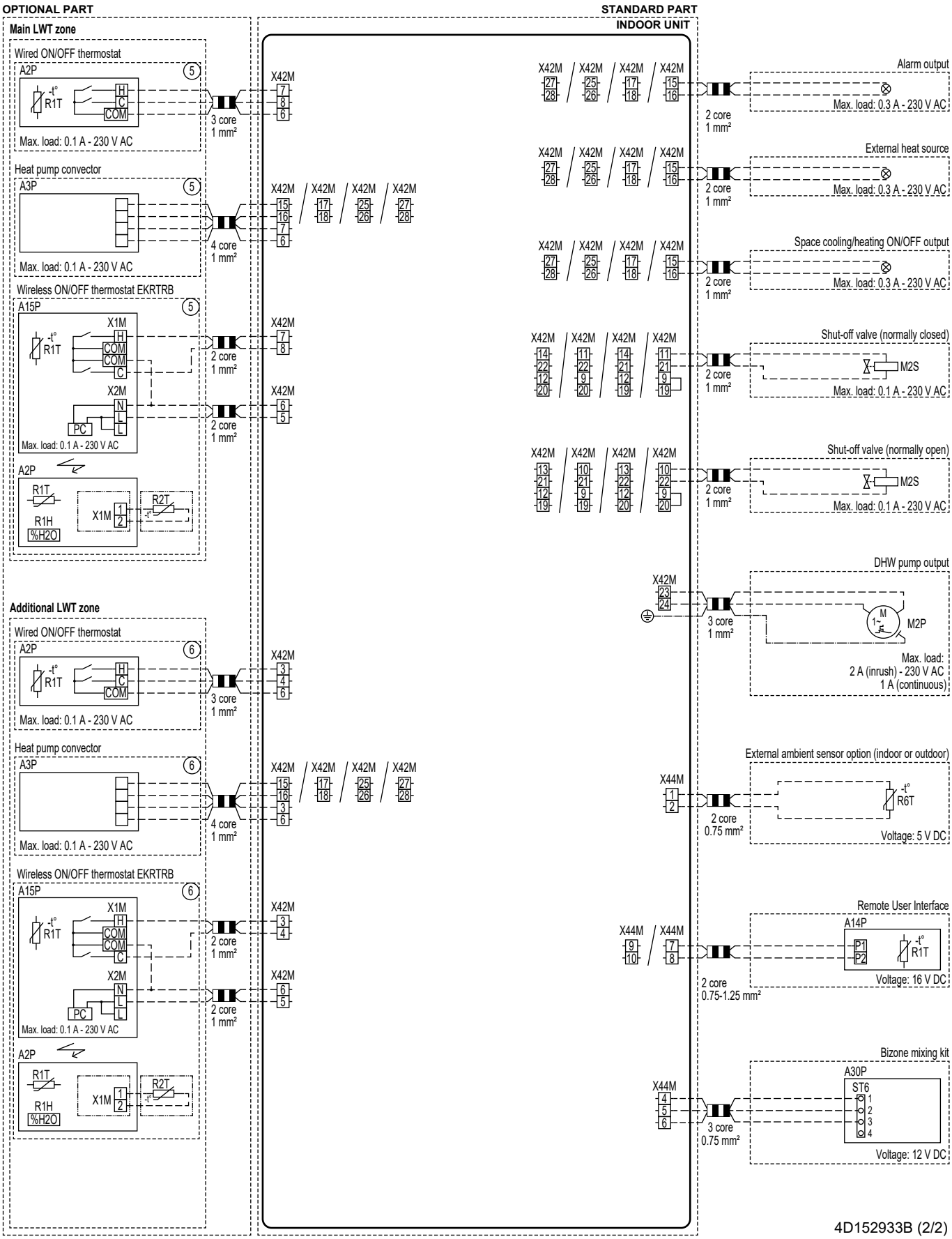
OPTIONAL PART
STANDARD PART
INDOOR UNIT
Main LWT zone
Wired ON/OFF thermostat
A2P
R1T
H
C
COM
Max. load: 0.1 A - 230 V AC
3 core
1 mm²
X42M
Heat pump convector
A3P
4 core
1 mm²
Wireless ON/OFF thermostat EKRTRB
A15P
X1M
X2M
PC
2 core
1 mm²
R1H
%H2O
R2T
Additional LWT zone
Alarm output
External heat source
Space cooling/heating ON/OFF output
Shut-off valve (normally closed)
Shut-off valve (normally open)
M2S
DHW pump output
M2P
Max. load:
2 A (inrush) - 230 V AC
1 A (continuous)
External ambient sensor option (indoor or outdoor)
X44M
R6T
2 core
0.75 mm²
Voltage: 5 V DC
Remote User Interface
A14P
P1
P2
2 core
0.75-1.25 mm²
Voltage: 16 V DC
Bizone mixing kit
A30P
ST6
3 core
0.75 mm²
Voltage: 12 V DC
4D152933B (2/2)

11.3 Technical specifications: Domestic hot water tank

11.3.1 Test results in accordance with EN12897 (2016)

INFORMATION

This unit has been tested and approved according to BS EN12897:2016

Description	Hot water capacity	Reheat time
EPVX10SU18AJ4V	175 l	17 min 14 sec
EPVX10SU23AJ4V	207 l	22 min 00 sec
EPVX14SU18AJ4V	175 l	17 min 14 sec
EPVX14SU23AJ4V	207 l	22 min 00 sec

11.3.2 Warning label

WARNING TO USER

- Do not remove or adjust any component part of this installation. Contact the installer.
- Should the system develop a fault, switch the system off and contact the installer.

WARNING TO INSTALLER

- This installation is subject to building regulation approval, notify Local Authority of intention to install.
- Use only manufacturer's recommended spare parts. Contact your local Daikin dealer.
- Installed by

  name .....

  address .....

  tel. No. .....

  completion date .....

TECHNICAL SPECIFICATIONS EN12897: 2016

- Maximum water supply pressure to pressure reducing valve: **12 bar**
- Operating pressure/set pressure of pressure reducing valve: **3.5 bar**
- Maximum primary working pressure (heating): **2.5 bar**
- Maximum flow temperature: **65 ºC**
- Expansion vessel pre-charge pressure: **3.5 bar**
- Expansion valve setting: **8 bar**
- Temperature and pressure relief valve replacement part No.: **302810P**
- Operating pressure of temperature and pressure relief valve: **10 bar**
- Operating temperature of temperature and pressure relief valve: **95 ºC**
- Operating temperature of thermal cut-out (2 pieces): **89 ºC**
- Primary heating power input:

  EPVX10SU18AJ4V **33 kW**
  EPVX10SU23AJ4V **32 kW**
  EPVX14SU18AJ4V **33 kW**
  EPVX14SU23AJ4V **32 kW**
- Primary flow rate to reach primary heating power input: **15 l/min**
- Standing heat loss:

  EPVX10SU18AJ4V **1.35 kWh/24h**
  EPVX10SU23AJ4V **1.76 kWh/24h**
  EPVX14SU18AJ4V **1.35 kWh/24h**
  EPVX14SU23AJ4V **1.76 kWh/24h**
- Model **storage capacity** **mass of unit when full**

  EPVX10SU18AJ4V **182 l** **291 kg**
  EPVX10SU23AJ4V **221 l** **347 kg**
  EPVX14SU18AJ4V **182 l** **291 kg**
  EPVX14SU23AJ4V **221 l** **347 kg**
- Maximum design pressure: **10 bar**
- Rated volume heat exchanger: **9.1 l**

DAIKIN EUROPE N.V.

4P820806-1 0000000M

Copyright 2025 Daikin

DAIKIN EUROPE N.V.
Zandvoordestraat 300, B-8400 Oostende, Belgium

4P820806-1 2025.08